Model Name : A4WAL
File Name : LA-C371P

Compal Confidential

A4WAL M/B Schematics Document

Intel Braswell-M/D + N16X

2015-03-04

REV:1.0

www.repair1.ru

PCB@
DAX PCB 1BW LA-C371P REV0 MB 1

Part Number	Description
DA6001BJ000	PCB 1BW LA-C371P REV0 MB 1

Security Classification	Compal Secret Data		
Issued Date	2014/03/19	Deciphered Date	2015/03/18

THIS SHEET OF ENGINEERING DRAWING IS THE PROPRIETARY PROPERTY OF COMPAL ELECTRONICS, INC. AND CONTAINS CONFIDENTIAL AND TRADE SECRET INFORMATION. THIS SHEET MAY NOT BE TRANSFERED FROM THE CUSTODY OF THE COMPETENT DIVISION OF R&D DEPARTMENT EXCEPT AS AUTHORIZED BY COMPAL ELECTRONICS, INC. NEITHER THIS SHEET NOR THE INFORMATION IT CONTAINS MAY BE USED BY OR DISCLOSED TO ANY THIRD PARTY WITHOUT PRIOR WRITTEN CONSENT OF COMPAL ELECTRONICS, INC.

Compal Electronics, Inc.

Title: *Cover Page*

Size: Custom | Document Number: A4WAL_Braswell-M/D_LA-C371P | Rev: 1.0

Date: Wednesday, March 04, 2015 | Sheet 1 of 55

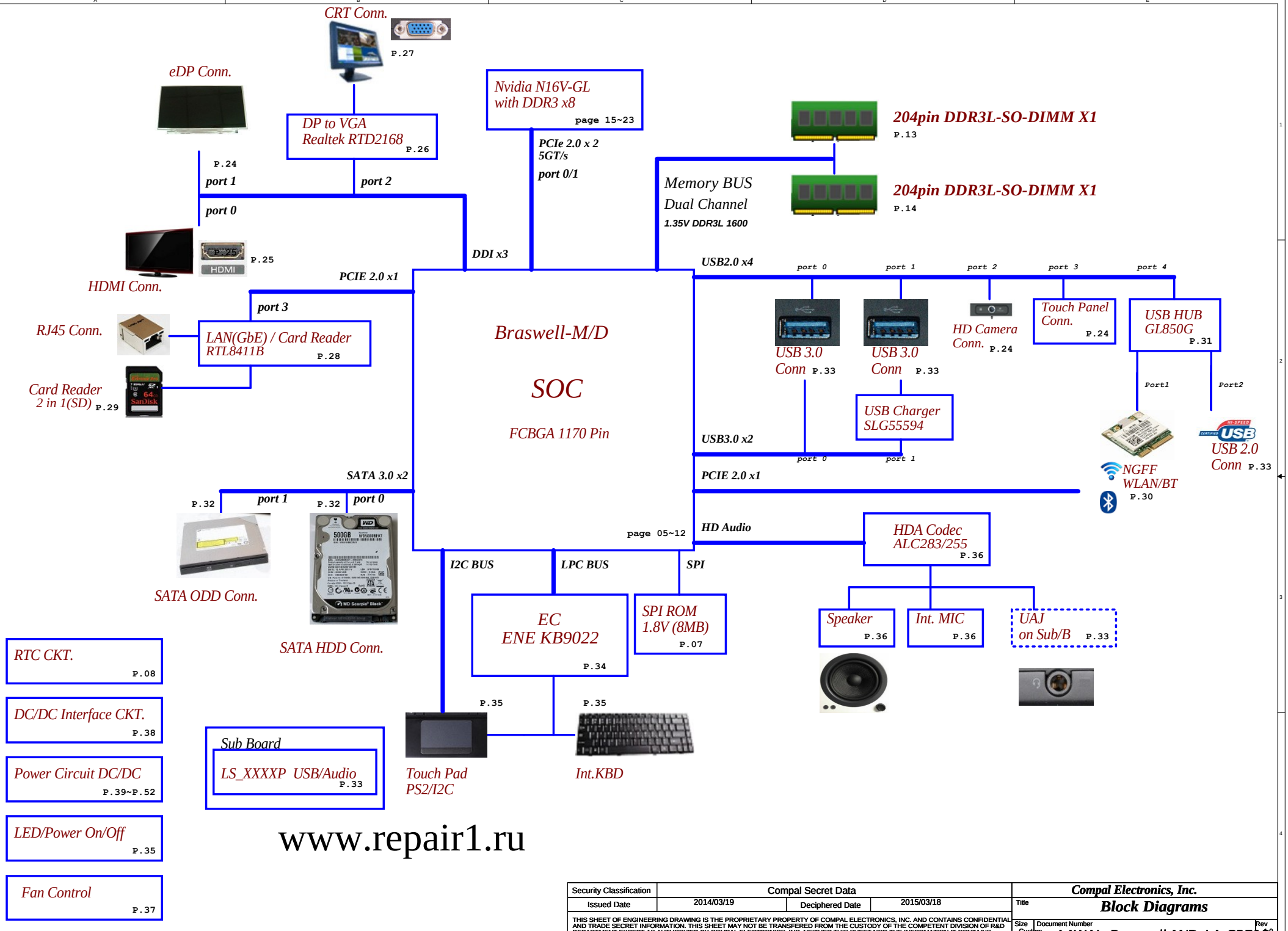

www.repair1.ru

Security Classification	Compal Secret Data		
Issued Date	2014/03/19	Deciphered Date	2015/03/18

THIS SHEET OF ENGINEERING DRAWING IS THE PROPRIETARY PROPERTY OF COMPAL ELECTRONICS, INC. AND CONTAINS CONFIDENTIAL AND TRADE SECRET INFORMATION. THIS SHEET MAY NOT BE TRANSFERED FROM THE CUSTODY OF THE COMPETENT DIVISION OF R&D DEPARTMENT EXCEPT AS AUTHORIZED BY COMPAL ELECTRONICS, INC. NEITHER THIS SHEET NOR THE INFORMATION IT CONTAINS MAY BE USED BY OR DISCLOSED TO ANY THIRD PARTY WITHOUT PRIOR WRITTEN CONSENT OF COMPAL ELECTRONICS, INC.

Compal Electronics, Inc.

Title: **Block Diagrams**

Size: Custom | Document Number: A4WAL_Braswell-M/D_LA-C371P | Rev: 1.0

Date: Wednesday, March 04, 2015 | Sheet 2 of 55

Voltage Rails

Power Plane	Description	S0	S3	S4/S5
+19V_VIN	19V Adapter power supply	ON	ON	ON
BATT+	12V Battery power supply	ON	ON	ON
+19VB	AC or battery power rail for power circuit. (19V/12V)	ON	ON	ON
+RTCVCC	RTC Battery Power	ON	ON	ON
+1.05VALW	+1.05v Always power rail	ON	ON	ON
+1.15VALW	+1.15v Always power rail	ON	ON	ON
+1.24VALW	+1.24v Always power rail	ON	ON	ON
+1.8VALW	+1.8v Always power rail	ON	ON	ON
+3VALW	+3.3v Always power rail	ON	ON	ON
+5VALW	+5.0v Always power rail	ON	ON	ON
+1.35V	+1.35V power rail for DDR3L	ON	ON	OFF
+3V_PTP	+3.3V power rail for PTP	ON	ON	OFF
+SOC_VCC	Core voltage for SOC	ON	OFF	OFF
+SOC_VGG	GFX voltage for SOC	ON	OFF	OFF
+0.675VS	+0.675V power rail for DDR3L Terminator	ON	OFF	OFF
+1.8VS	+1.8v system power rail	ON	OFF	OFF
+3VS	+3.3v system power rail	ON	OFF	OFF
+5VS	+5.0v system power rail	ON	OFF	OFF
+3VSDGPU	+3.3V dGPU power rail	ON**	OFF	OFF
+VGA_CORE	Core voltage for dGPU	ON**	OFF	OFF
+1.5VSDGPU	+1.5V dGPU power rail	ON**	OFF	OFF
+1.05VSDGPU	+1.05V dGPU power rail	ON**	OFF	OFF

Note : ON* means that this power plane is ON only with AC power available, otherwise it is OFF.

Note : ON** dGPU optimus on

Board ID / SKU ID Table for AD channel

Vcc	3.3V				
Ra	100K +/- 1%				
Board ID	Rb	V min	V typ	V max	EC AD
0	0		0.000V	0.300V	0x00 - 0x0B
1	12K +/- 1%	0.347V	0.354V	0.360V	0x0C - 0x1C
2	15K +/- 1%	0.423V	0.430V	0.438V	0x1D - 0x26
3	20K +/- 1%	0.541V	0.550V	0.559V	0x27 - 0x30
4	27K +/- 1%	0.691V	0.702V	0.713V	0x31 - 0x3B
5	33K +/- 1%	0.807V	0.819V	0.831V	0x3C - 0x46
6	43K +/- 1%	0.978V	0.992V	1.006V	0x47 - 0x54
7	56K +/- 1%	1.169V	1.185V	1.200V	0x55 - 0x64
8	75K +/- 1%	1.398V	1.414V	1.430V	0x65 - 0x76
9	100K +/- 1%	1.634V	1.650V	1.667V	0x77 - 0x87
10	130K +/- 1%	1.849V	1.865V	1.881V	0x88 - 0x96
11	160K +/- 1%	2.015V	2.031V	2.046V	0x97 - 0xA3
12	200K +/- 1%	2.185V	2.200V	2.215V	0xA4 - 0xAD
13	240K +/- 1%	2.316V	2.329V	2.343V	0xAE - 0xB7
14	270K +/- 1%	2.395V	2.408V	2.421V	0xB8 - 0xC0
15	330K +/- 1%	2.521V	2.533V	2.544V	0xC1 - 0xC9
16	430K +/- 1%	2.667V	2.677V	2.687V	0xCA - 0xD3
17	560K +/- 1%	2.791V	2.800V	2.808V	0xD4 - 0xDC
18	750K +/- 1%	2.905V	2.912V	2.919V	0xDD - 0xE6
19	NC	3.000V	3.300V		0xE7 - 0xFF

BOARD ID Table_LA-C371P

Board ID	PCB Revision
01	EVT_LA-C371PR01
02	DVT_LA-C371PR02
03	PVT_LA-C371PR10

43 level BOM table

43 Level	Description	BOM Structure
4319X5BOL01	SMT MB AC371 A4WAL UMA HDMI	1DMIC@/255@/EMC@/HDD@/HUB@/NBYOC@/KB@/PCB@/LPC3V@/TSI@/UMA@/QHAX@
4319X5BOL02	SMT MB AC371 A4WAL DIS N16V-GM HDMI	1DMIC@/255@/EMC@/NGC6@/HDD@/HUB@/NBYOC@/KB@/PCB@/VGM@/LPC3V@/TSI@/VGA@/QHAW@
4319X5BOL03	SMT MB AC371 A4WAL DIS N16S-GT HDMI	1DMIC@/255@/EMC@/GC6@/HDD@/HUB@/NBYOC@/KB@/PCB@/SGT@/LPC3V@/TSI@/VGA@/QHAW@
4319X5BOL04	SMT MB AC371 A4WAL DIS N16V-GM 4G HDMI	1DMIC@/255@/EMC@/NGC6@/HDD@/HUB@/NBYOC@/KB@/PCB@/VGM@/LPC3V@/TSI@/VGA@/DR@/QHAW@
4319X5BOL05	SMT MB AC371 A4WAL DIS N16S-GT 4G HDMI	1DMIC@/255@/EMC@/GC6@/HDD@/HUB@/NBYOC@/KB@/PCB@/SGT@/LPC3V@/TSI@/VGA@/DR@/QHAW@
4319X5BOL06	SMT MB AC371 A4WAL UMA QHAW HDMI	1DMIC@/255@/EMC@/HDD@/HUB@/NBYOC@/KB@/PCB@/LPC3V@/TSI@/UMA@/QHAW@
4319X5BOL07	SMT MB AC371 A4WAL DIS GM2G QHAX HDMI	1DMIC@/255@/EMC@/NGC6@/HDD@/HUB@/NBYOC@/KB@/PCB@/VGM@/LPC3V@/TSI@/VGA@/QHAX@
4319X5BOL08	SMT MB AC371 A4WAL DIS GM4G QHAX HDMI	1DMIC@/255@/EMC@/NGC6@/HDD@/HUB@/NBYOC@/KB@/PCB@/VGM@/LPC3V@/TSI@/VGA@/DR@/QHAX@

EC SMBUS Routing Table

EC	Power	BAT	CHGR	SOC	DGPU
EC_SMB_CK1 EC_SMB_DA1	+3VALW	V	V	X	X
EC_SMB_CK2 EC_SMB_DA2	+3VS	X	X	V	V

SOC SMBUS Routing Table

SOC	Power	DIMM1	DIMM2	NGFF	XDP	EC	DGPU	RTD2168
SMB Address								
SOC_SMBCLK SOC_SMBDATA	+1.8VALW to +3VS	V	V	V	X	V	V	V

I2C Map

	Power	Touch PAD	Touch Panel
I2C Address		0xXX	0xXX
I2C Port2	+1.8VALW to +TS_PWR	X	V
I2C Port5	+1.8VALW to +3V_PTP	V	X

BOM Option Table

Item	BOM Structure	Item	BOM Structure
Unpop	@	X76 VRAM	X76@
Connector	CONN@	with BYOC	BYOC@
EMC requirement	EMC@	without BYOC	NBYOC@
EMC requirement depop	@EMC@	EA Serial HDD	HDD@
Touch Screen I2C	TSI@	BA Serial HDD	BA@
KB BL	KB@	non USB HUB	NHUB@
TPM	TPM@	USB HUB	HUB@
NTPM	NTPM@	Dual Rank	DR@
Power Button	DBG@	G-sensor	GSEN@
dGPU	VGA@	CPU QHAX	QHAX@
N16S-GT SKU	SGT@	CPU QHAW	QHAW@
N16V-GM SKU	VGM@		
CODEC(ALC255)	255@		
CODEC(ALC283)	283@		
Non GPU CG6 Function	NGC6@		
GPU CG6 Function	GC6@		

Security Classification	Compal Secret Data		
Issued Date	2014/03/19	Deciphered Date	2015/03/18

THIS SHEET OF ENGINEERING DRAWING IS THE PROPRIETARY PROPERTY OF COMPAL ELECTRONICS, INC. AND CONTAINS CONFIDENTIAL AND TRADE SECRET INFORMATION. THIS SHEET MAY NOT BE TRANSFERED FROM THE CUSTODY OF THE COMPETENT DIVISION OF R&D DEPARTMENT EXCEPT AS AUTHORIZED BY COMPAL ELECTRONICS, INC. NEITHER THIS SHEET NOR THE INFORMATION IT CONTAINS MAY BE USED BY OR DISCLOSED TO ANY THIRD PARTY WITHOUT PRIOR WRITTEN CONSENT OF COMPAL ELECTRONICS, INC.

Compal Electronics, Inc.

Title: Notes List

Size: Custom | Document Number: A4WAL_Braswell-M/D_LA-C371P | Rev: 1.0

Date: Wednesday, March 04, 2015 | Sheet 3 of 55

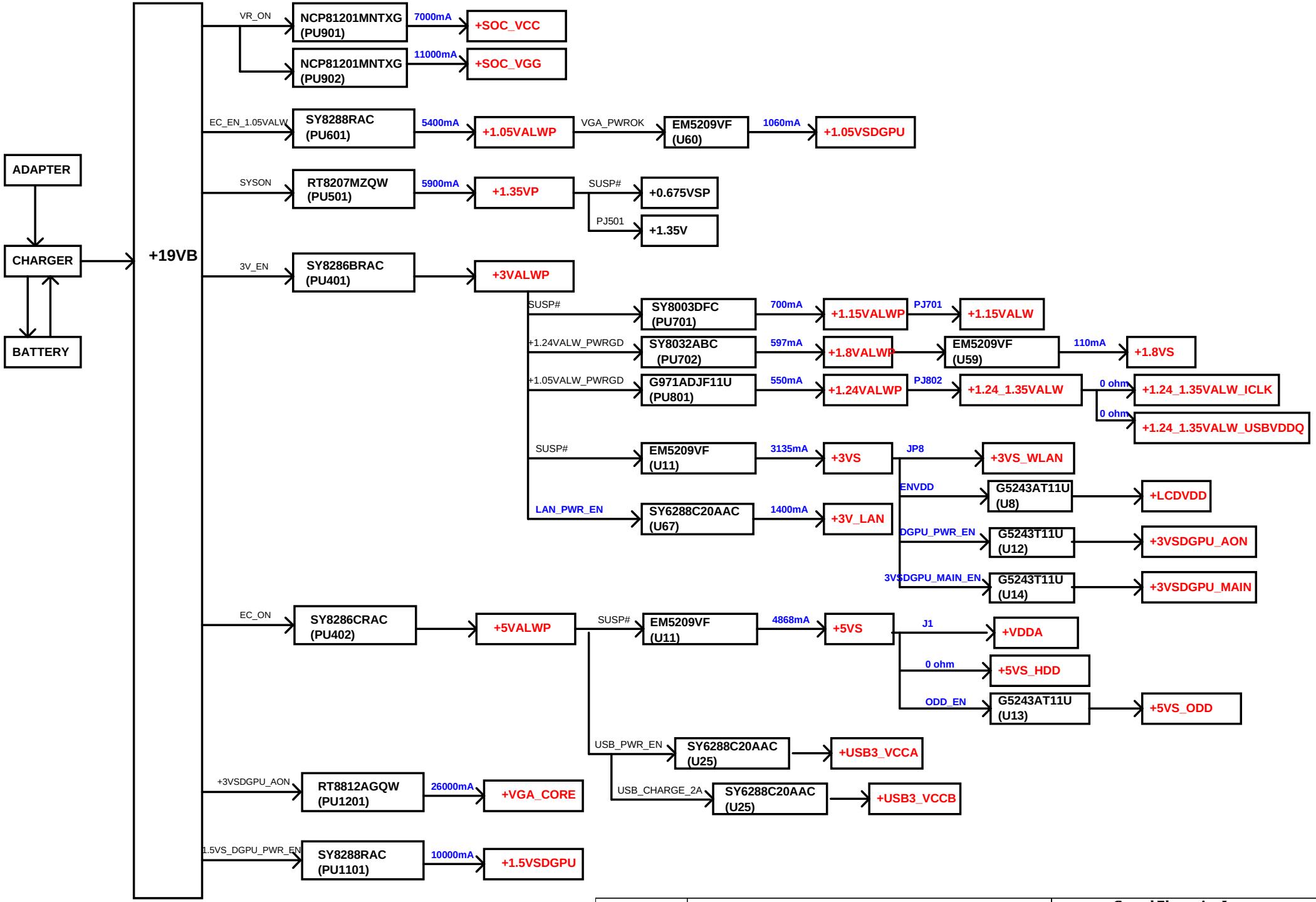

Security Classification	Compal Secret Data		
Issued Date	2014/03/19	Deciphered Date	2015/03/18

THIS SHEET OF ENGINEERING DRAWING IS THE PROPRIETARY PROPERTY OF COMPAL ELECTRONICS, INC. AND CONTAINS CONFIDENTIAL AND TRADE SECRET INFORMATION. THIS SHEET MAY NOT BE TRANSFERED FROM THE CUSTODY OF THE COMPETENT DIVISION OF R&D DEPARTMENT EXCEPT AS AUTHORIZED BY COMPAL ELECTRONICS, INC. NEITHER THIS SHEET NOR THE INFORMATION IT CONTAINS MAY BE USED BY OR DISCLOSED TO ANY THIRD PARTY WITHOUT PRIOR WRITTEN CONSENT OF COMPAL ELECTRONICS, INC.

Compal Electronics, Inc.

Title: **Power Rail**

Size: Custom | Document Number: A4WAL_Braswell-M/D_LA-C371P | Rev: 1.0

Date: Wednesday, March 04, 2015 | Sheet 4 of 55

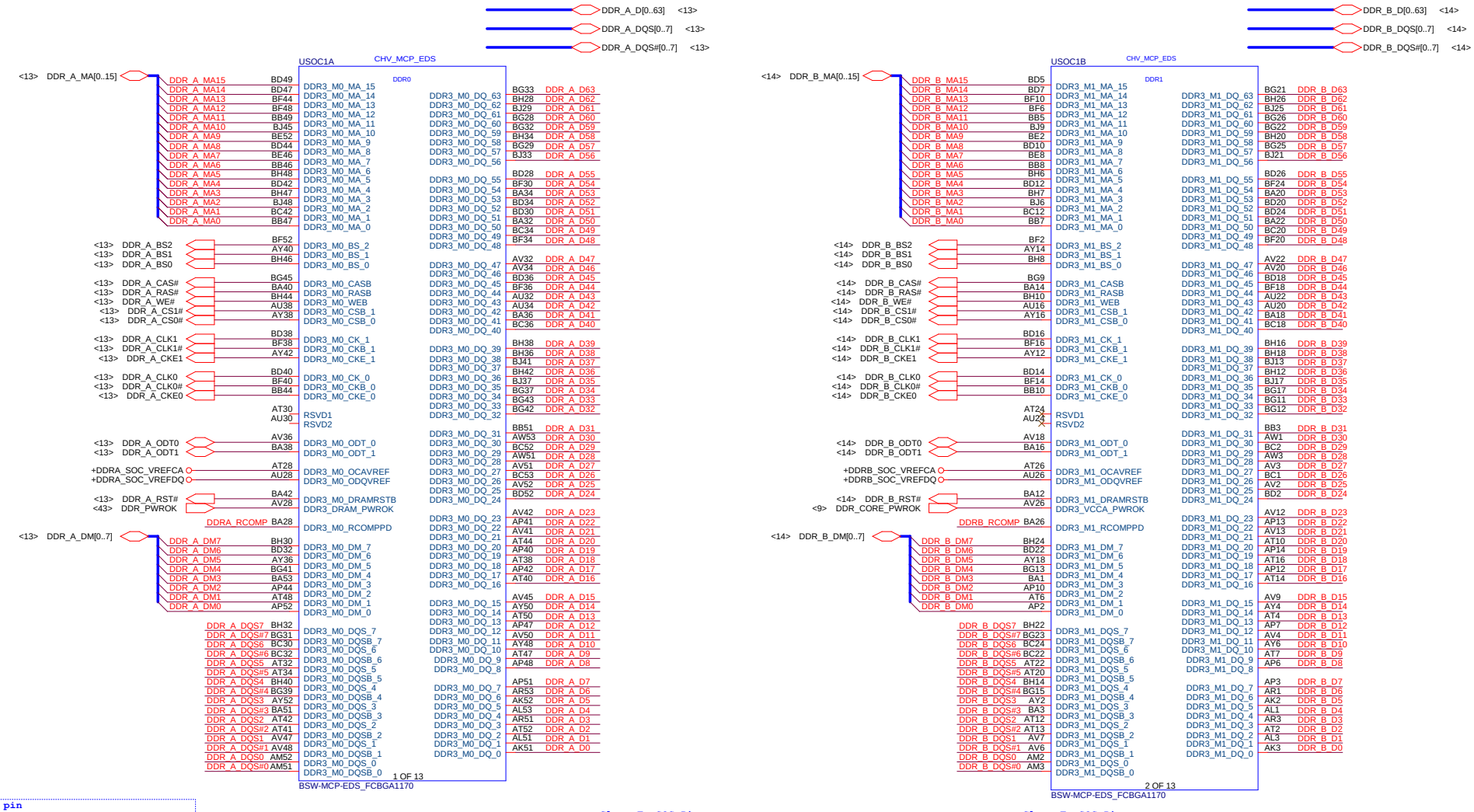

USOC1
QHAX@

S IC FH8066501715905 QHAX B1 1.36G FCBGA15 1380
SA00008GO00

USOC1
QHAW@

S IC FH8066501715905 QHAW B1 1.36G FCBGA15 1380
SA00008GO10

Security Classification	Compal Secret Data		
Issued Date	2014/03/19	Deciphered Date	2015/03/18

THIS SHEET OF ENGINEERING DRAWING IS THE PROPRIETARY PROPERTY OF COMPAL ELECTRONICS, INC. AND CONTAINS CONFIDENTIAL AND TRADE SECRET INFORMATION. THIS SHEET MAY NOT BE TRANSFERED FROM THE CUSTODY OF THE COMPETENT DIVISION OF R&D DEPARTMENT EXCEPT AS AUTHORIZED BY COMPAL ELECTRONICS, INC. NEITHER THIS SHEET NOR THE INFORMATION IT CONTAINS MAY BE USED BY OR DISCLOSED TO ANY THIRD PARTY WITHOUT PRIOR WRITTEN CONSENT OF COMPAL ELECTRONICS, INC.

Compal Electronics, Inc.

Title: **VLV-M SOC Memory DDR3L**

Size: Custom | Document Number: A4WAL_Braswell-M/D_LA-C371P | Rev: 1.0

Date: Wednesday, March 04, 2015 | Sheet 5 of 55

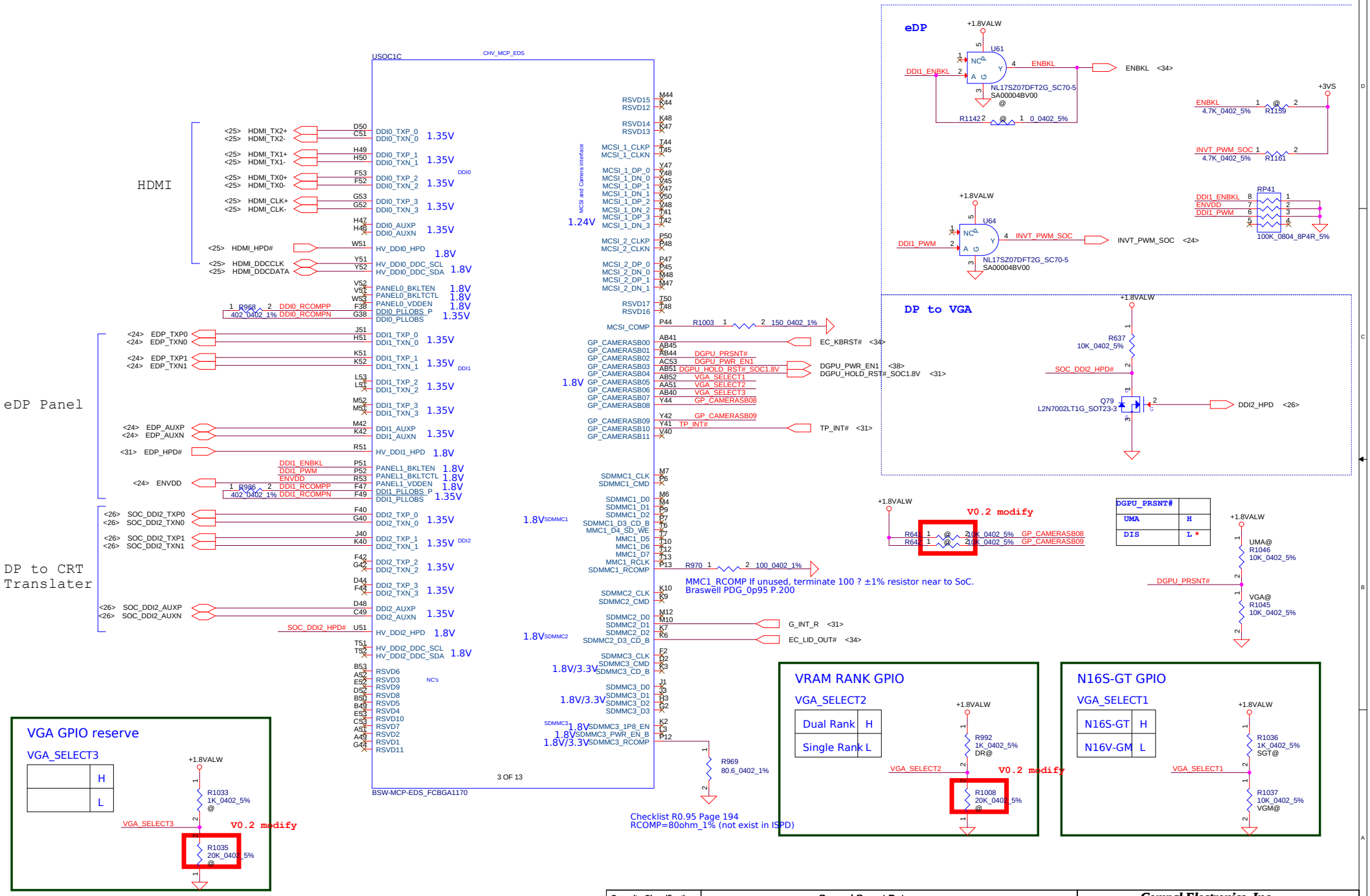

Security Classification	Compal Secret Data		
Issued Date	2014/03/19	Deciphered Date	2015/03/18

THIS SHEET OF ENGINEERING DRAWING IS THE PROPRIETARY PROPERTY OF COMPAL ELECTRONICS, INC. AND CONTAINS CONFIDENTIAL AND TRADE SECRET INFORMATION. THIS SHEET MAY NOT BE TRANSFERED FROM THE CUSTODY OF THE COMPETENT DIVISION OF R&D DEPARTMENT EXCEPT AS AUTHORIZED BY COMPAL ELECTRONICS, INC. NEITHER THIS SHEET NOR THE INFORMATION IT CONTAINS MAY BE USED BY OR DISCLOSED TO ANY THIRD PARTY WITHOUT PRIOR WRITTEN CONSENT OF COMPAL ELECTRONICS, INC.

Compal Electronics, Inc.

Title: **VLV-M SOC Display**

Size: Custom | Document Number: A4WAL_Braswell-M/D_LA-C371P | Rev: 1.0

Date: Wednesday, March 04, 2015 | Sheet 6 of 55

Follow DVR1044_ACER_HSIO Mapping Design Guide_V1p0

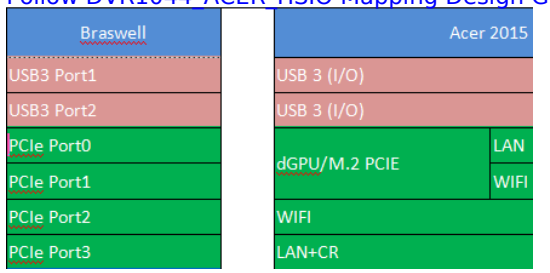

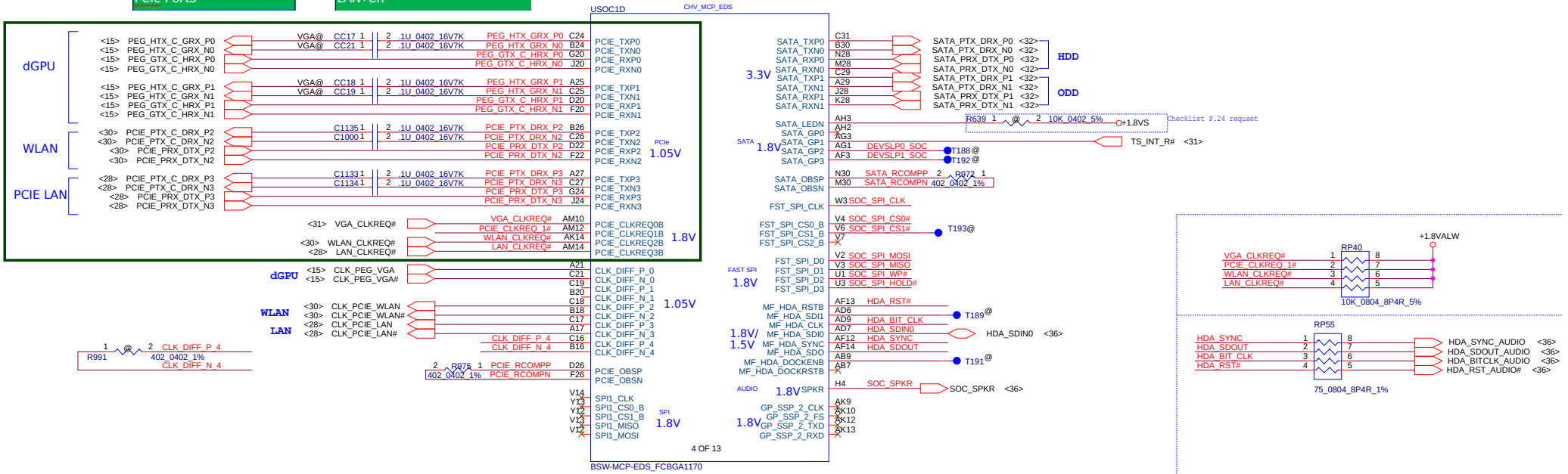

Checklist suggest PU 100K
Follow VC(V0.1)

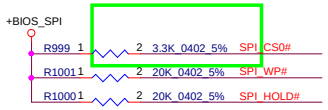

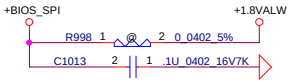

From CPU

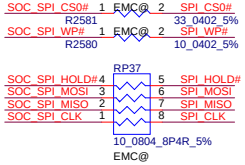

SPI ROM (8MByte) 1.8V

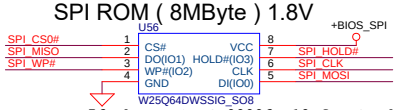

U56 change to SA00006ZV10 for Quad-I/O

Reserve for EMI(Near SPI ROM)

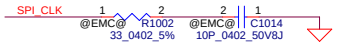

Security Classification	Compal Secret Data		
Issued Date	2014/03/19	Deciphered Date	2015/03/18

THIS SHEET OF ENGINEERING DRAWING IS THE PROPRIETARY PROPERTY OF COMPAL ELECTRONICS, INC. AND CONTAINS CONFIDENTIAL AND TRADE SECRET INFORMATION. THIS SHEET MAY NOT BE TRANSFERED FROM THE CUSTODY OF THE COMPETENT DIVISION OF R&D DEPARTMENT EXCEPT AS AUTHORIZED BY COMPAL ELECTRONICS, INC. NEITHER THIS SHEET NOR THE INFORMATION IT CONTAINS MAY BE USED BY OR DISCLOSED TO ANY THIRD PARTY WITHOUT PRIOR WRITTEN CONSENT OF COMPAL ELECTRONICS, INC.

Compal Electronics, Inc.

Title: VLV-M SOC SATA/PCI-E/HDA

Size: Custom | Document Number: A4WAL_Braswell-M/D_LA-C371P | Rev: 1.0

Date: Wednesday, March 04, 2015 | Sheet 7 of 55

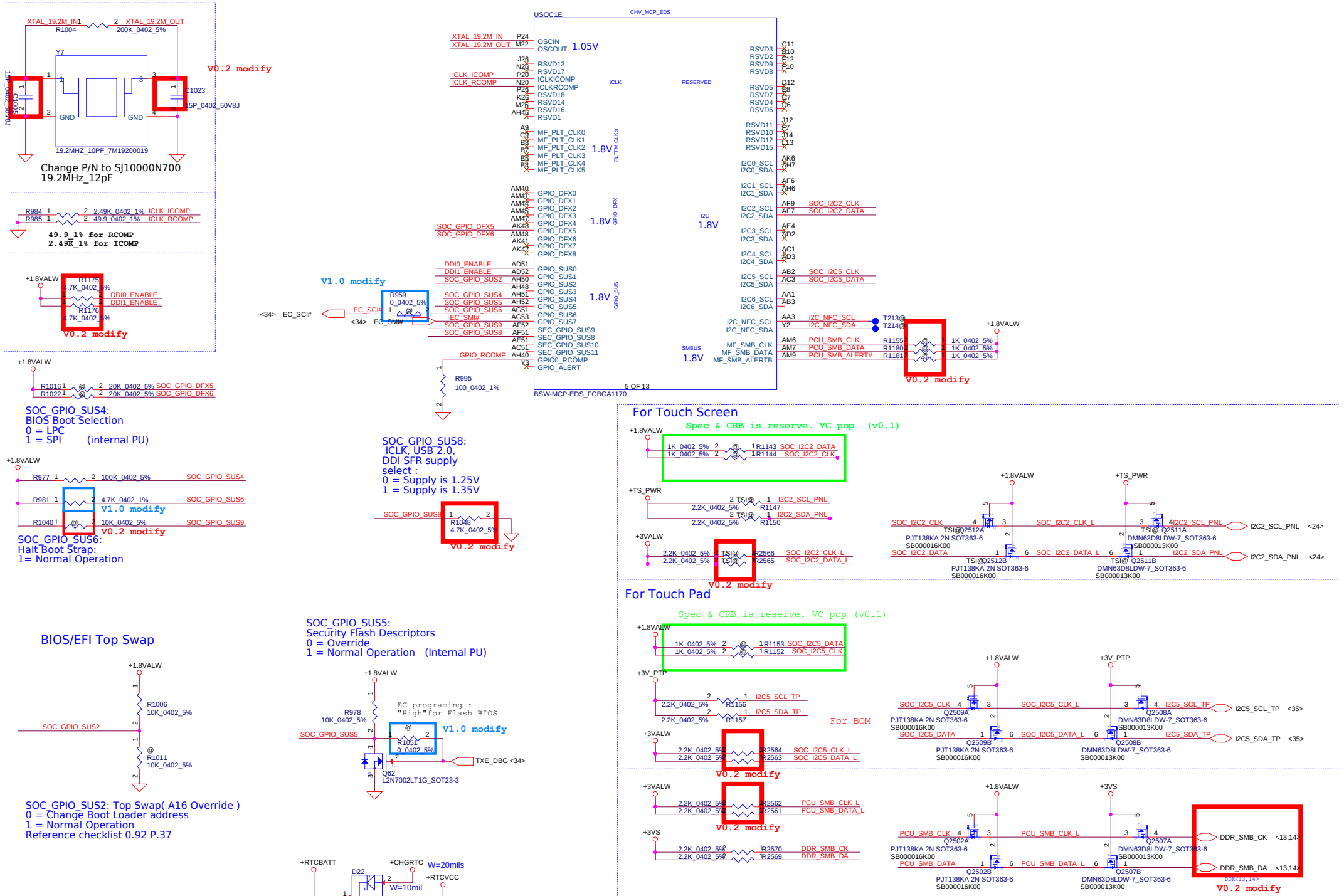

Security Classification	Compal Secret Data			Compal Electronics, Inc.
Issued Date	2014/03/19	Deciphered Date	2015/03/18	Title: VLV-M SOC CLK/PMU/SPI

THIS SHEET OF ENGINEERING DRAWING IS THE PROPRIETARY PROPERTY OF COMPAL ELECTRONICS, INC. AND CONTAINS CONFIDENTIAL AND TRADE SECRET INFORMATION. THIS SHEET MAY NOT BE TRANSFERED FROM THE CUSTODY OF THE COMPETENT DIVISION OF R&D DEPARTMENT EXCEPT AS AUTHORIZED BY COMPAL ELECTRONICS, INC. NEITHER THIS SHEET NOR THE INFORMATION IT CONTAINS MAY BE USED BY OR DISCLOSED TO ANY THIRD PARTY WITHOUT PRIOR WRITTEN CONSENT OF COMPAL ELECTRONICS, INC.

Size	Document Number	Rev
Custom	A4WAL Braswell-M/D LA-C371P	1.0

Date: Wednesday, March 04, 2015 Sheet 8 of 55

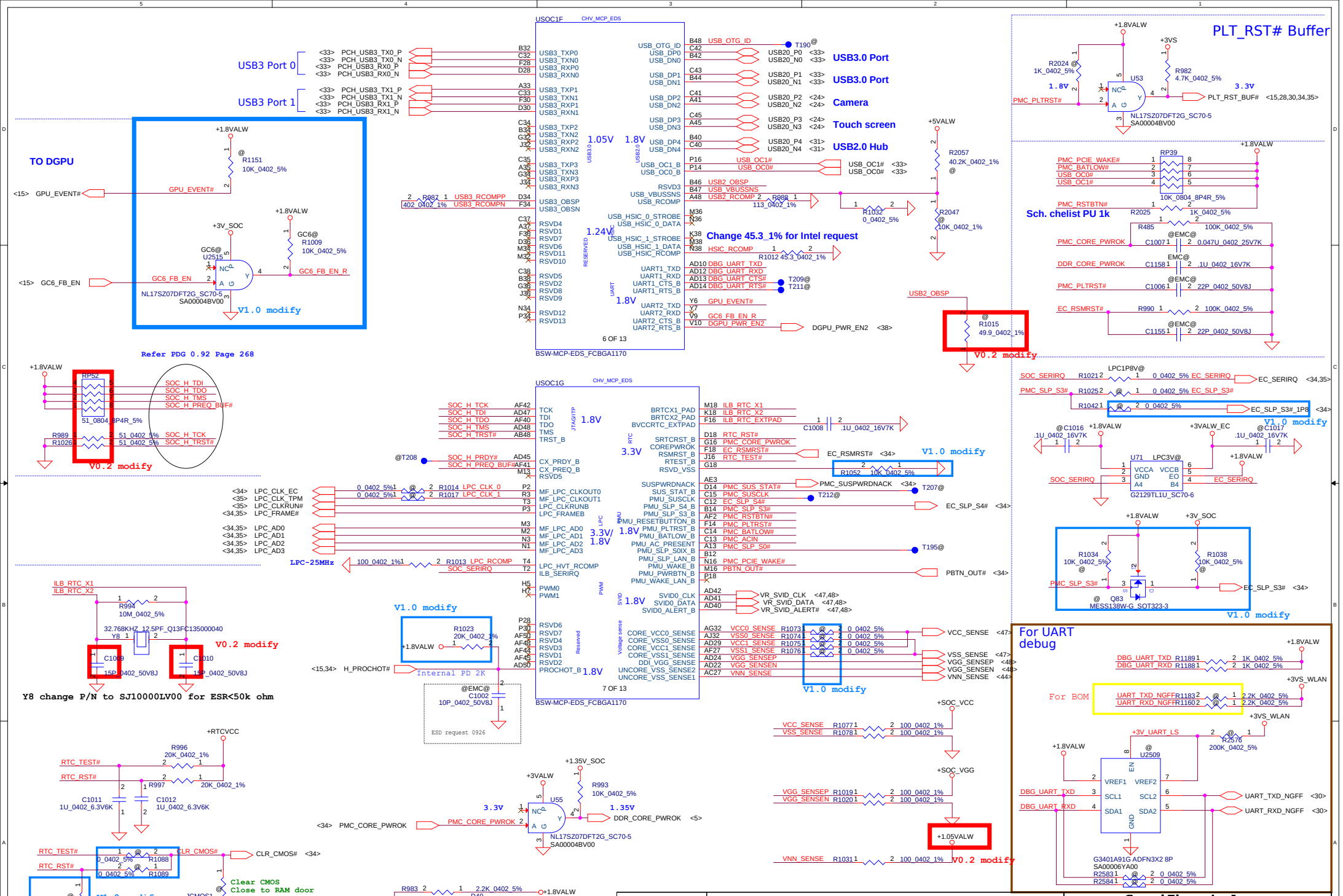

Security Classification	Compal Secret Data		
Issued Date	2014/03/19	Deciphered Date	2015/03/18

THIS SHEET OF ENGINEERING DRAWING IS THE PROPRIETARY PROPERTY OF COMPAL ELECTRONICS, INC. AND CONTAINS CONFIDENTIAL AND TRADE SECRET INFORMATION. THIS SHEET MAY NOT BE TRANSFERED FROM THE CUSTODY OF THE COMPETENT DIVISION OF R&D DEPARTMENT EXCEPT AS AUTHORIZED BY COMPAL ELECTRONICS, INC. NEITHER THIS SHEET NOR THE INFORMATION IT CONTAINS MAY BE USED BY OR DISCLOSED TO ANY THIRD PARTY WITHOUT PRIOR WRITTEN CONSENT OF COMPAL ELECTRONICS, INC.

Compal Electronics, Inc.

Title: VLV-M SOC USB/LPC/SMBus

Size: Custom | Document Number: A4WAL_Braswell-M/D_LA-C371P | Rev: 1.0

Date: Wednesday, March 04, 2015 | Sheet 9 of 55

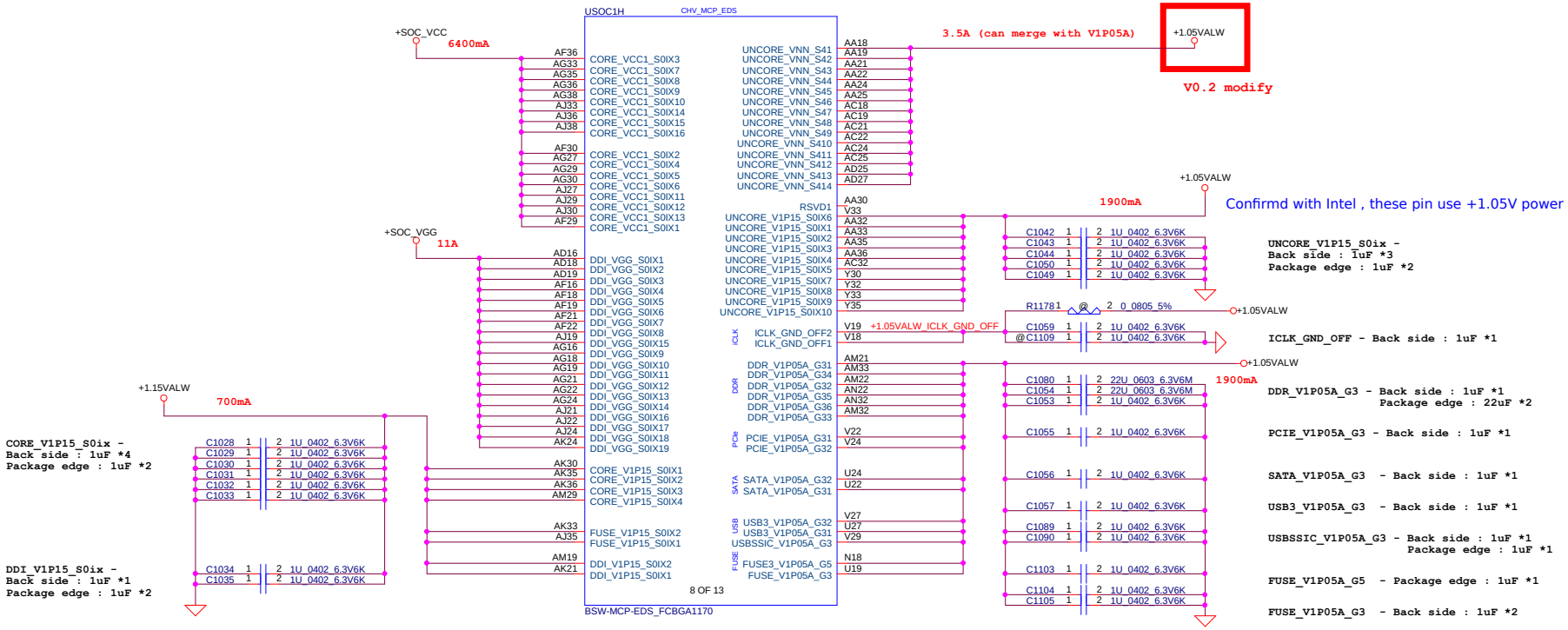

Security Classification	Compal Secret Data		
Issued Date	2014/03/19	Deciphered Date	2015/03/18

THIS SHEET OF ENGINEERING DRAWING IS THE PROPRIETARY PROPERTY OF COMPAL ELECTRONICS, INC. AND CONTAINS CONFIDENTIAL AND TRADE SECRET INFORMATION. THIS SHEET MAY NOT BE TRANSFERED FROM THE CUSTODY OF THE COMPETENT DIVISION OF R&D DEPARTMENT EXCEPT AS AUTHORIZED BY COMPAL ELECTRONICS, INC. NEITHER THIS SHEET NOR THE INFORMATION IT CONTAINS MAY BE USED BY OR DISCLOSED TO ANY THIRD PARTY WITHOUT PRIOR WRITTEN CONSENT OF COMPAL ELECTRONICS, INC.

Compal Electronics, Inc.

Title: **VLV-M SOC Power**

Size: Custom | Document Number: A4WAL Braswell-M/D LA-C371P | Rev: 1.0

Date: Wednesday, March 04, 2015 | Sheet 10 of 55

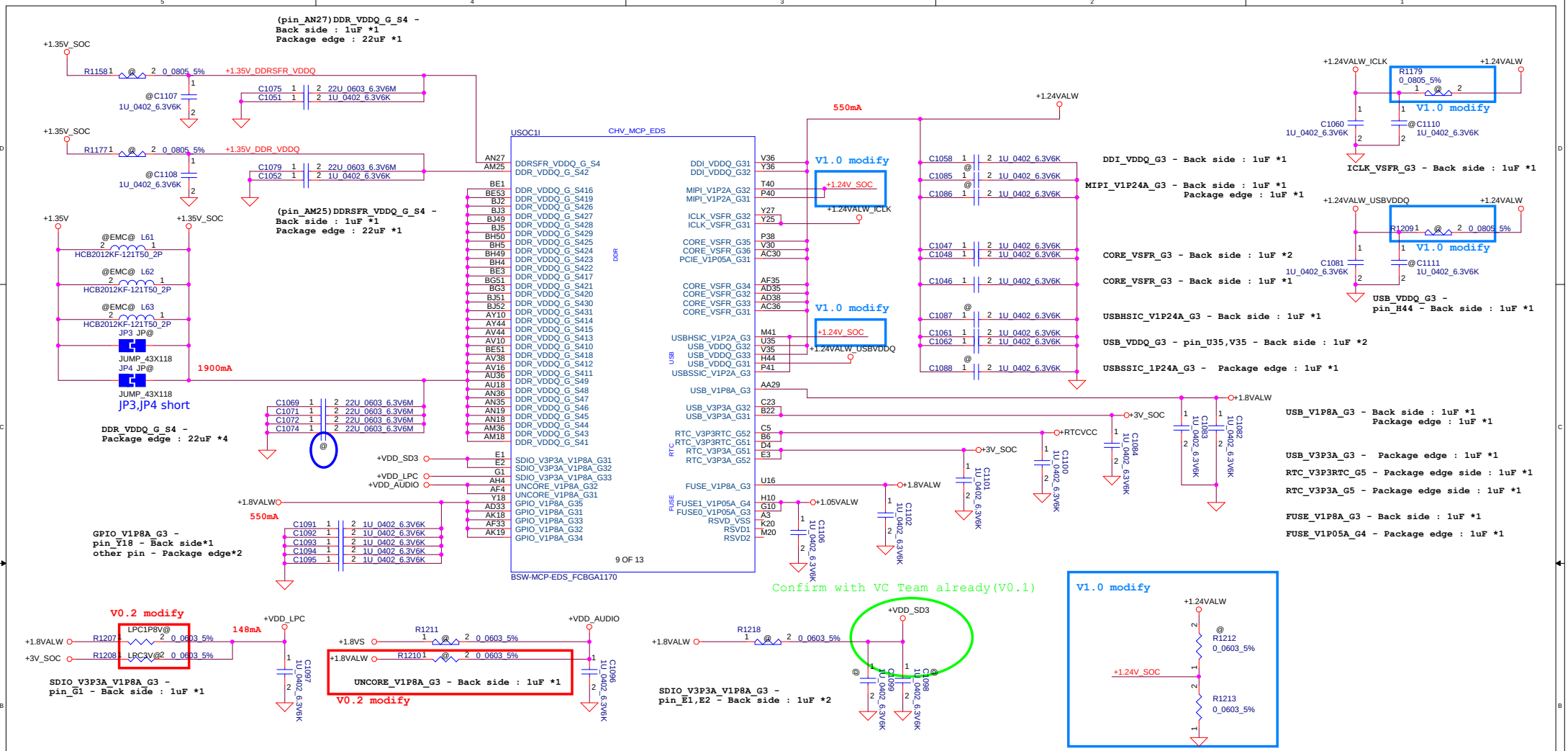

Security Classification	Compal Secret Data		
Issued Date	2014/03/19	Deciphered Date	2015/03/18

THIS SHEET OF ENGINEERING DRAWING IS THE PROPRIETARY PROPERTY OF COMPAL ELECTRONICS, INC. AND CONTAINS CONFIDENTIAL AND TRADE SECRET INFORMATION. THIS SHEET MAY NOT BE TRANSFERED FROM THE CUSTODY OF THE COMPETENT DIVISION OF R&D DEPARTMENT EXCEPT AS AUTHORIZED BY COMPAL ELECTRONICS, INC. NEITHER THIS SHEET NOR THE INFORMATION IT CONTAINS MAY BE USED BY OR DISCLOSED TO ANY THIRD PARTY WITHOUT PRIOR WRITTEN CONSENT OF COMPAL ELECTRONICS, INC.

Compal Electronics, Inc.

Title: **VLV-M SOC Power**

Size: Custom | Document Number: A4WAL Braswell-M/D LA-C371P | Rev: 1.0

Date: Wednesday, March 04, 2015 | Sheet 11 of 55

ball_B52 :
if connect to GND , layout side need use 3mil-core and will cost up ,
so left NC pin_B52 (Intel CRB also left NC)

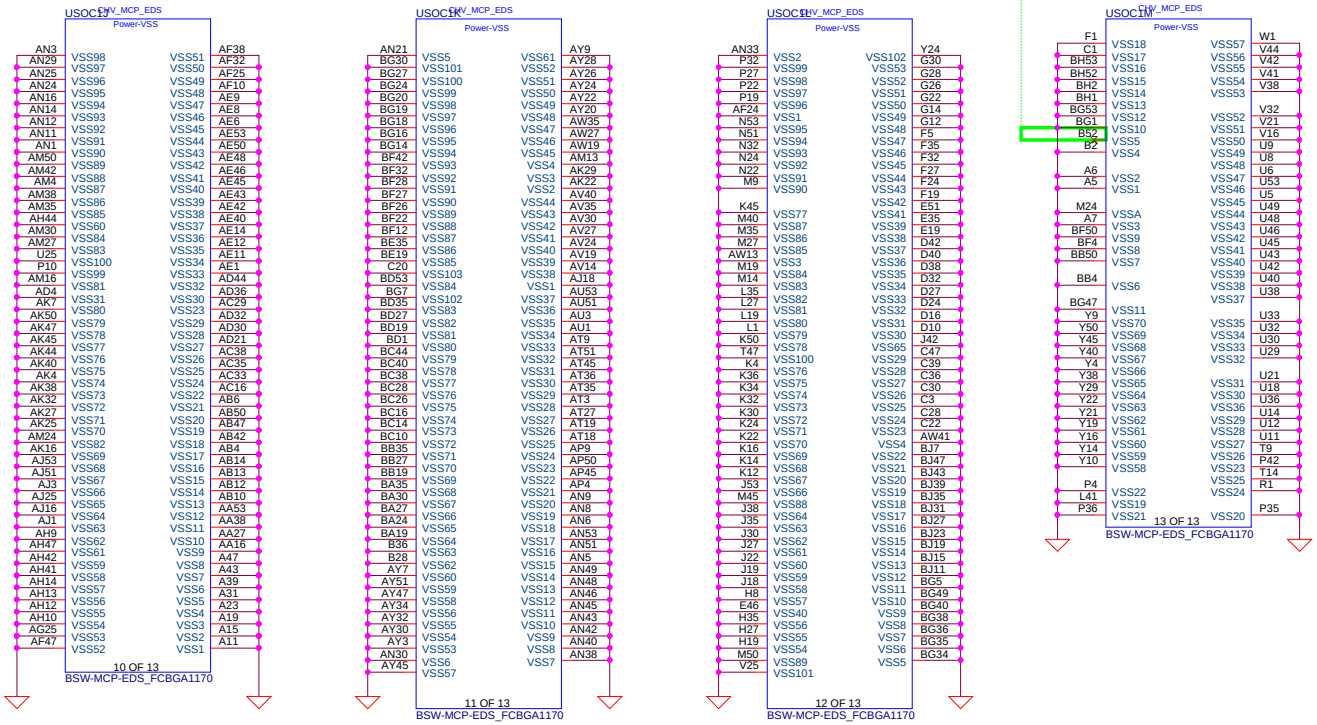

Security Classification	Compal Secret Data			Compal Electronics, Inc.
Issued Date	2014/03/19	Deciphered Date	2015/03/18	Title VLV-M SOC GND
THIS SHEET OF ENGINEERING DRAWING IS THE PROPRIETARY PROPERTY OF COMPAL ELECTRONICS, INC. AND CONTAINS CONFIDENTIAL AND TRADE SECRET INFORMATION. THIS SHEET MAY NOT BE TRANSFERED FROM THE CUSTODY OF THE COMPETENT DIVISION OF R&D DEPARTMENT EXCEPT AS AUTHORIZED BY COMPAL ELECTRONICS, INC. NEITHER THIS SHEET NOR THE INFORMATION IT CONTAINS MAY BE USED BY OR DISCLOSED TO ANY THIRD PARTY WITHOUT PRIOR WRITTEN CONSENT OF COMPAL ELECTRONICS, INC.				Size Custom / Document Number A4WAL_Braswell-M/D_LA-C371P / Rev 1.0
				Date: Wednesday, March 04, 2015 / Sheet 12 of 55

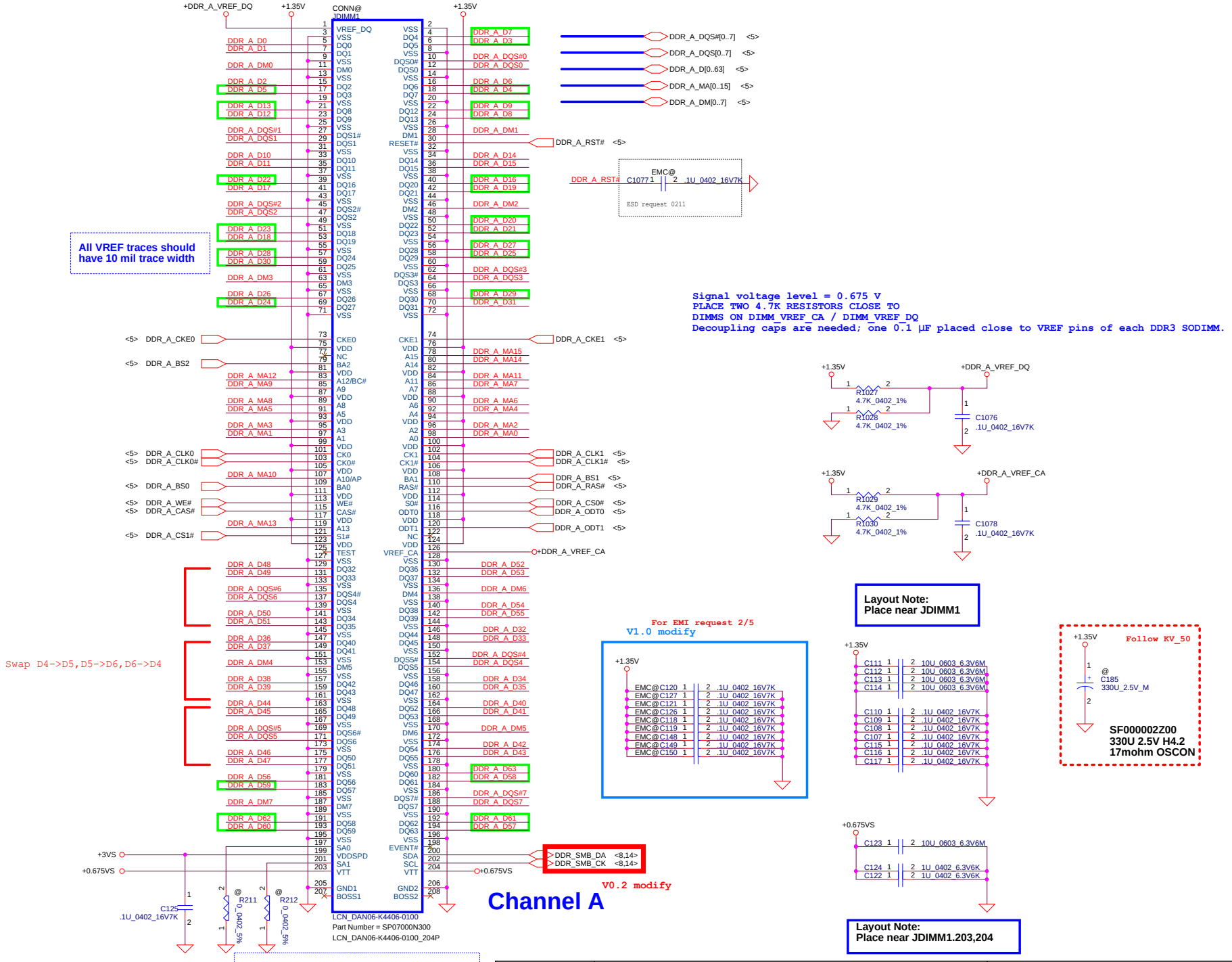

Security Classification	Compal Secret Data		
Issued Date	2014/08/21	Deciphered Date	2015/08/21

THIS SHEET OF ENGINEERING DRAWING IS THE PROPRIETARY PROPERTY OF COMPAL ELECTRONICS, INC. AND CONTAINS CONFIDENTIAL AND TRADE SECRET INFORMATION. THIS SHEET MAY NOT BE TRANSFERED FROM THE CUSTODY OF THE COMPETENT DIVISION OF R&D DEPARTMENT EXCEPT AS AUTHORIZED BY COMPAL ELECTRONICS, INC. NEITHER THIS SHEET NOR THE INFORMATION IT CONTAINS MAY BE USED BY OR DISCLOSED TO ANY THIRD PARTY WITHOUT PRIOR WRITTEN CONSENT OF COMPAL ELECTRONICS, INC.

Compal Electronics, Inc.

Title: DDR3L DIMMA

Size: Custom | Document Number: A4WAL Braswell-M/D LA-C371P | Rev: 1.0

Date: Wednesday, March 04, 2015 | Sheet 13 of 55

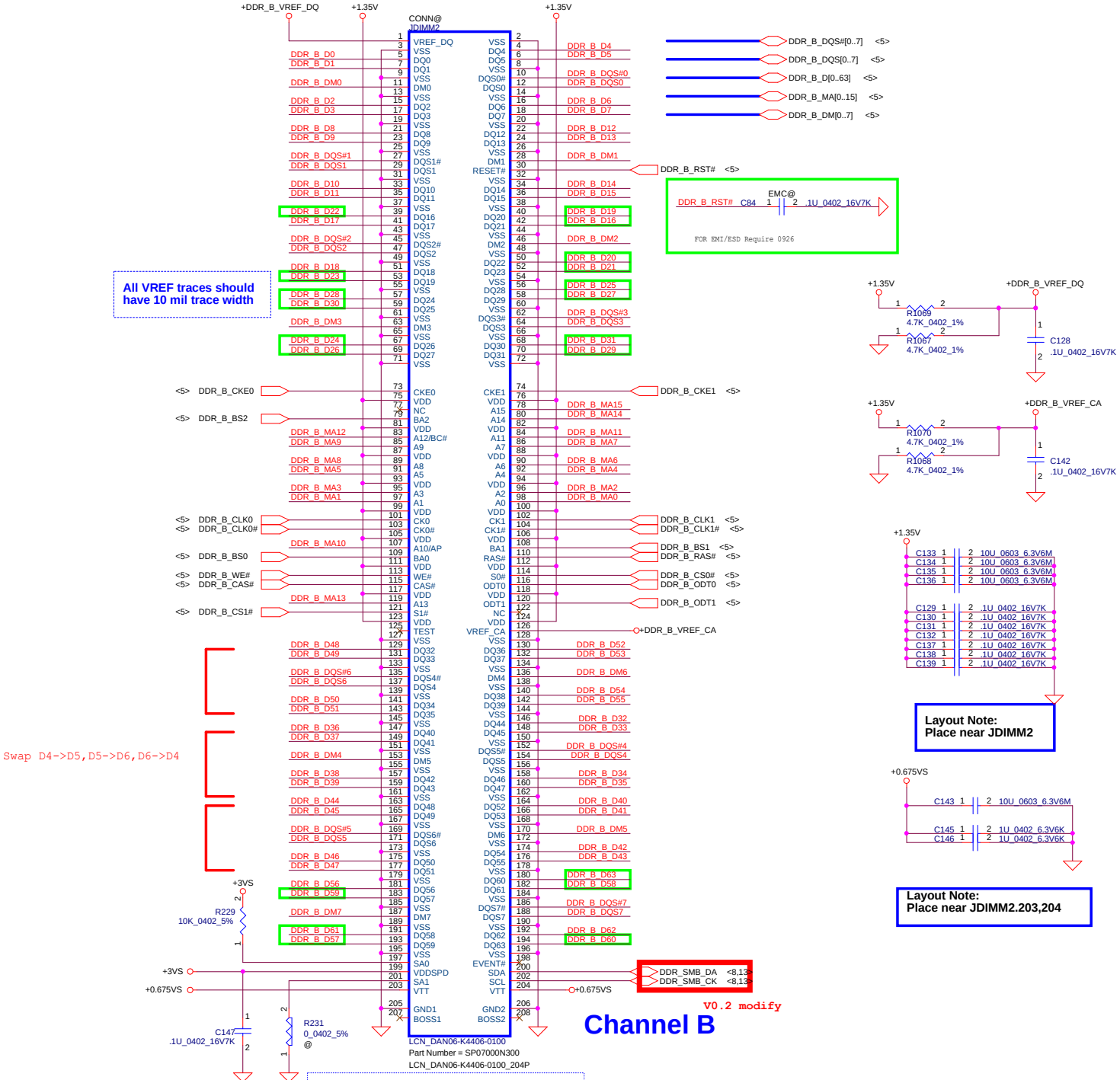

<Address: SA0:SA1=10 (A2H)>

DIMM_2 STD H:4mm

Security Classification	Compal Secret Data		
Issued Date	2014/08/21	Deciphered Date	2015/08/21

THIS SHEET OF ENGINEERING DRAWING IS THE PROPRIETARY PROPERTY OF COMPAL ELECTRONICS, INC. AND CONTAINS CONFIDENTIAL AND TRADE SECRET INFORMATION. THIS SHEET MAY NOT BE TRANSFERED FROM THE CUSTODY OF THE COMPETENT DIVISION OF R&D DEPARTMENT EXCEPT AS AUTHORIZED BY COMPAL ELECTRONICS, INC. NEITHER THIS SHEET NOR THE INFORMATION IT CONTAINS MAY BE USED BY OR DISCLOSED TO ANY THIRD PARTY WITHOUT PRIOR WRITTEN CONSENT OF COMPAL ELECTRONICS, INC.

Compal Electronics, Inc.

Title: DDR3L DIMMB

Size: Custom | Document Number: A4WAL Braswell-M/D LA-C371P | Rev: 1.0

Date: Wednesday, March 04, 2015 | Sheet 14 of 55

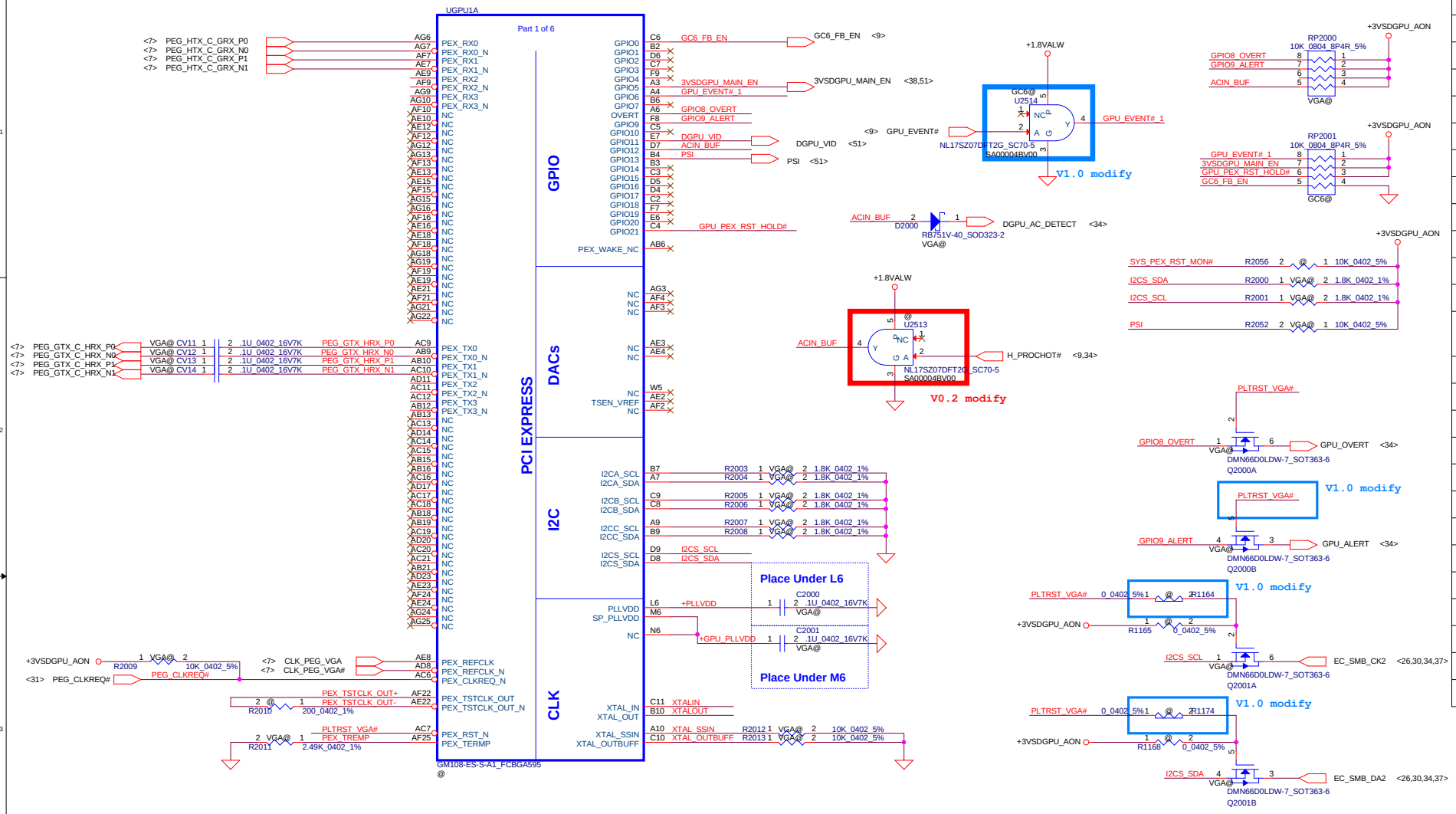

GPIO	I/O	USAGE
GPIO0	O	GC6_FB_EN
GPIO1	O	MEM_VDD_CTL
GPIO2	O	LCD_BL_PWM
GPIO3	O	LCD_VCC
GPIO4	O	LCD_BL_EN
GPIO5	O	3V3_MAIN_EN
GPIO6	I	GPU_EVENT#
GPIO7	O	3D Vision
GPIO8	I	SYS_PEX_RST_MON#
GPIO9	I/O	ALERT
GPIO10	O	MEM_VREF_CTL
GPIO11	O	PWM_VID
GPIO12	I	PWR_LEVEL
GPIO13	O	PSI
GPIO14	I	HPD_A
GPIO15	I	HPD_C
GPIO16	I	FRAME_LOCK#
GPIO17	I	HPD_D
GPIO18	I	HPD_E
GPIO19	I	HPD_F or HPD_B
GPIO20		Reserved
GPIO21	O	GPU_PEX_RST_HOLD#
GPIO22		
GPIO23		
GPIO24		

Security Classification	Compal Secret Data		
Issued Date	2014/08/28	Deciphered Date	2016/08/28

THIS SHEET OF ENGINEERING DRAWING IS THE PROPRIETARY PROPERTY OF COMPAL ELECTRONICS, INC. AND CONTAINS CONFIDENTIAL AND TRADE SECRET INFORMATION. THIS SHEET MAY NOT BE TRANSFERED FROM THE CUSTODY OF THE COMPETENT DIVISION OF R&D DEPARTMENT EXCEPT AS AUTHORIZED BY COMPAL ELECTRONICS, INC. NEITHER THIS SHEET NOR THE INFORMATION IT CONTAINS MAY BE USED BY OR DISCLOSED TO ANY THIRD PARTY WITHOUT PRIOR WRITTEN CONSENT OF COMPAL ELECTRONICS, INC.

Compal Electronics, Inc.

Title: N16X PEG 1/9

Size: Custom | Document Number: A4WAL_Braswell-M/D_LA-C371P | Rev: 1.0

Date: Wednesday, March 04, 2015 | Sheet 15 of 55

VRAM Interface

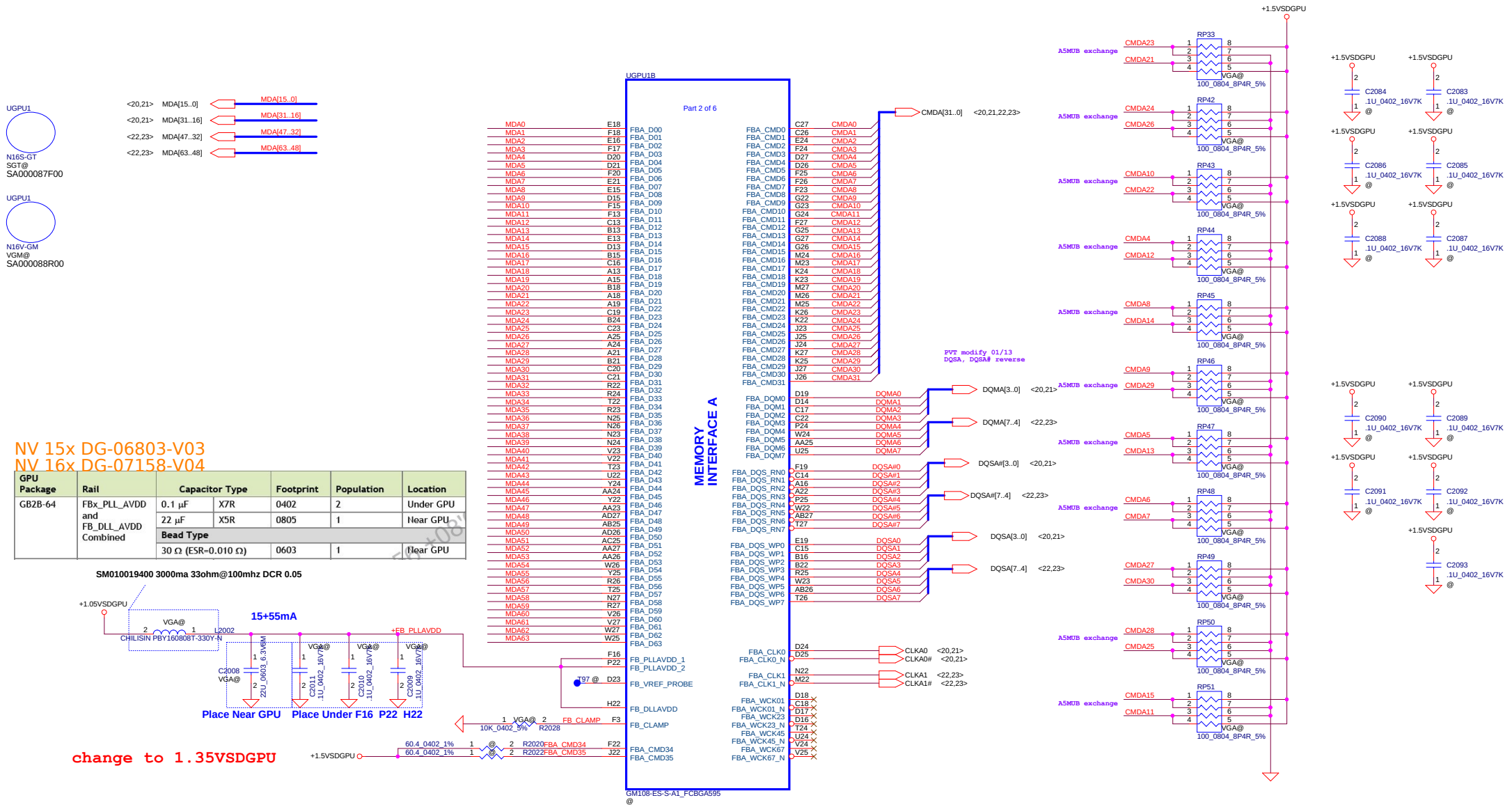

NV 15x DG-06803-V03
NV 16x DG-07158-V04

GPU Package	Rail	Capacitor Type		Footprint	Population	Location
GB2B-64	FBx_PLL_AVDD and FB_DLL_AVDD Combined	0.1 µF	X7R	0402	2	Under GPU
		22 µF	X5R	0805	1	Near GPU
		Bead Type				
		30 Ω (ESR=0.010 Ω)		0603	1	Near GPU

SM010019400 3000ma 33ohm@100mhz DCR 0.05

Security Classification	Compal Secret Data		
Issued Date	2014/08/28	Deciphered Date	2016/08/28

THIS SHEET OF ENGINEERING DRAWING IS THE PROPRIETARY PROPERTY OF COMPAL ELECTRONICS, INC. AND CONTAINS CONFIDENTIAL AND TRADE SECRET INFORMATION. THIS SHEET MAY NOT BE TRANSFERED FROM THE CUSTODY OF THE COMPETENT DIVISION OF R&D DEPARTMENT EXCEPT AS AUTHORIZED BY COMPAL ELECTRONICS, INC. NEITHER THIS SHEET NOR THE INFORMATION IT CONTAINS MAY BE USED BY OR DISCLOSED TO ANY THIRD PARTY WITHOUT PRIOR WRITTEN CONSENT OF COMPAL ELECTRONICS, INC.

Compal Electronics, Inc.

Title: N16X VRAM 2/9

Size: Custom | Document Number: A4WAL_Braswell-M/D_LA-C371P | Rev: 1.0

Date: Wednesday, March 04, 2015 | Sheet 16 of 55

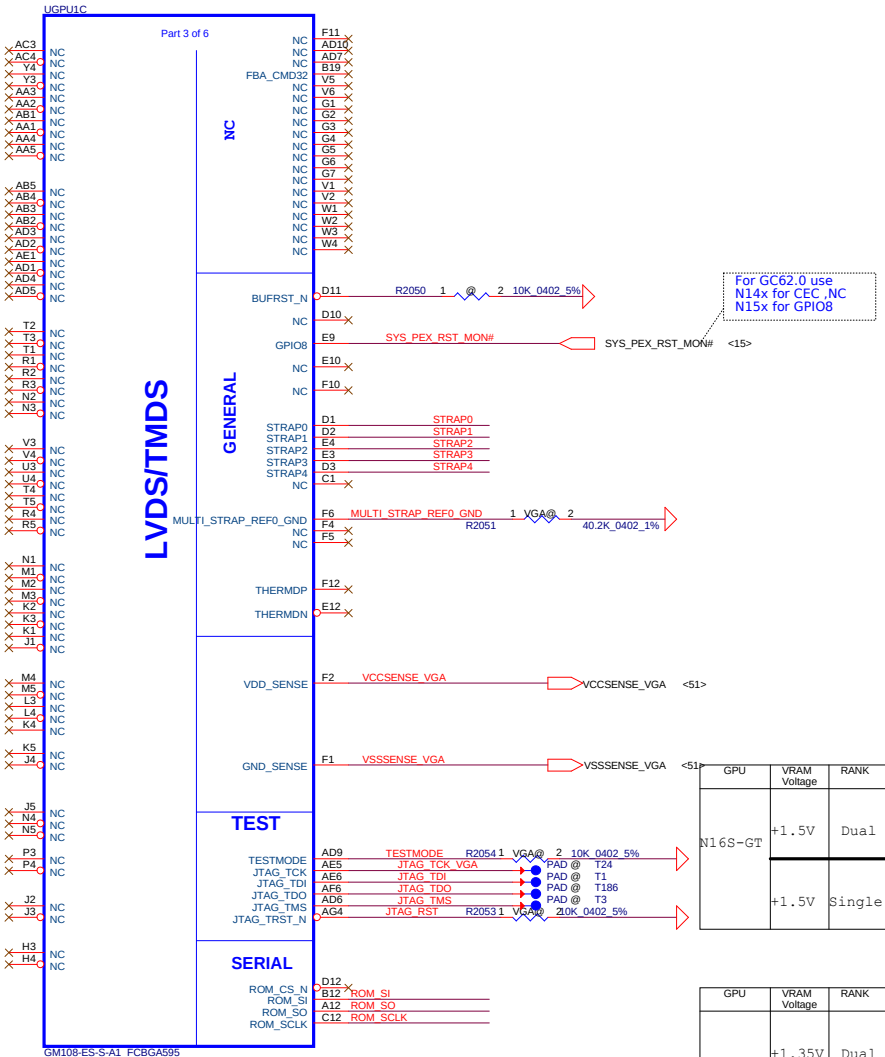

For GC62.0 use
N14x for CEC_NC
N15x for GPIO8

MULTI LEVEL STRAPS

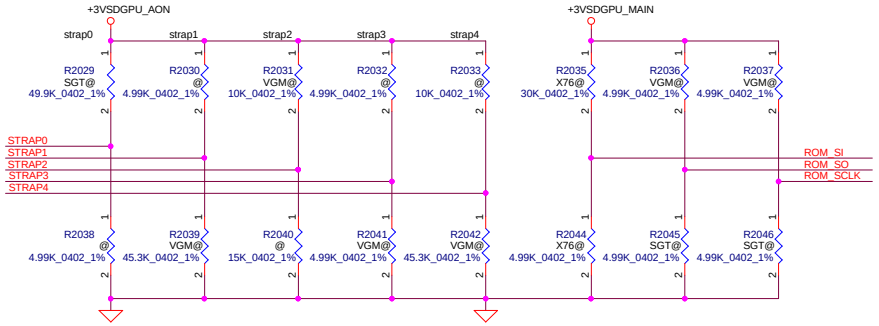

N16VGM Option Component

STRAP0 ---> R2029 2 VGM@1 45.3K_0402_1% SD034453280

For N16S-GT Binary strap table — Decive ID : 0x1347

GPU	VRAM Voltage	RANK	X76	Freq	Memory Size	Memory Config	strap0	strap1	strap2	strap3	strap4	ROM_SI	ROM_SO	ROM_SCLK
N16S-GT	+1.5V	Dual	X76615BOL13	1GHz	256Mx16x8 4G	0xC (SA00008DN10) Hynix H5TC4G63CFR-N0C	PU 49.9K	NC	NC	NC	NC	PU 24.9K	PD 4.99K	PD 4.99K
			X76615BOL12			0x1 (SA000077K20) Micron MT41J256M16HA-093G:E						PD 10K		
			X76615BOL05			0x2 (SA000076P20) Samsung K4W4G1646D-BC1A						PD 15K		
	+1.5V	Single	X76615BOL03	1GHz	256Mx16x4 2G	0x5 (SA00008DN10) Hynix H5TC4G63CFR-N0C						PD 30.1K		
			X76615BOL11			0x1 (SA000077K20) Micron MT41J256M16HA-093G:E						PD 10K		
			X76615BOL04			0x2 (SA000076P20) Samsung K4W4G1646D-BC1A						PD 15K		

For N16V-GM Binary strap table — Decive ID : 0x1299

GPU	VRAM Voltage	RANK	X76	Freq	Memory Size	Memory Config	strap0	strap1	strap2	strap3	strap4	ROM_SI	ROM_SO	ROM_SCLK
N16V-GM	+1.35V	Dual	X76615BOL09	900MHz	256Mx16x8 4G	0xA (SA00008DN10) Hynix H5TC4G63CFR-N0C	PU 45.3K	PD 45.3K	PU 10K	PD 4.99K	PD 45.3K	PU 15K	PU 4.99K	PU 4.99K
			X76615BOL08			0xD (SA000077K20) Micron MT41J256M16HA-093G:E						PU 30.1K		
			X76615BOL10			0xC (SA000076P20) Samsung K4W4G1646D-BC1A						PU 24.9K		
	+1.5V	Single	X76615BOL01	1GHz	256Mx16x4 2G	0x9 (SA00008DN10) Hynix H5TC4G63CFR-N0C						PU 10K		
			X76615BOL07			0x1 (SA000077K20) Micron MT41J256M16HA-093G:E						PD 10K		
			X76615BOL02			0x4 (SA000076P20) Samsung K4W4G1646D-BC1A						PD 24.9K		

VGA Power Sequence

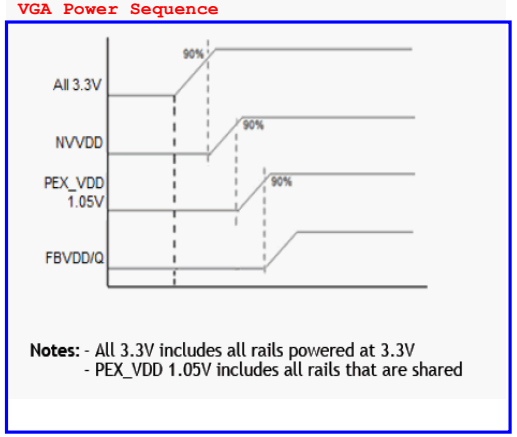

Security Classification	Compal Secret Data		
Issued Date	2014/08/28	Deciphered Date	2016/08/28

THIS SHEET OF ENGINEERING DRAWING IS THE PROPRIETARY PROPERTY OF COMPAL ELECTRONICS, INC. AND CONTAINS CONFIDENTIAL AND TRADE SECRET INFORMATION. THIS SHEET MAY NOT BE TRANSFERED FROM THE CUSTODY OF THE COMPETENT DIVISION OF R&D DEPARTMENT EXCEPT AS AUTHORIZED BY COMPAL ELECTRONICS, INC. NEITHER THIS SHEET NOR THE INFORMATION IT CONTAINS MAY BE USED BY OR DISCLOSED TO ANY THIRD PARTY WITHOUT PRIOR WRITTEN CONSENT OF COMPAL ELECTRONICS, INC.

Compal Electronics, Inc.

Title: **N16X LVDS 3/9**

Size: Custom | Document Number: A4WAL_Braswell-M/D_LA-C371P | Rev: 1.0

Date: Wednesday, March 04, 2015 | Sheet 17 of 55

NV 15x DG-06803-V03
NV 16x DG-07158-V04

GPU Package Type	Capacitor Type		Footprint	Population		Location
GB2B-64 DDR3	0.1µF	X7R	0402	2	2	Under GPU
	1 µF	X7R	0603	2	2	Under GPU
	4.7 µF	X6S	0603	2	2	Under GPU
	10 µF	X5R	0805	1	1	Near GPU
	22 µF	X5R	0805	1	1	Near GPU

GPU Package Type	Capacitor Type		Footprint	Population	Location
GB2B-64	1.0 µF	X6S	0402	1	Under GPU
	4.7 µF	X6S	0603	1	Near GPU
	10 µF	X5R	0805	1	Midway between GPU and Power Supply
	22 µF	X5R	0805	1	Midway between GPU and Power Supply

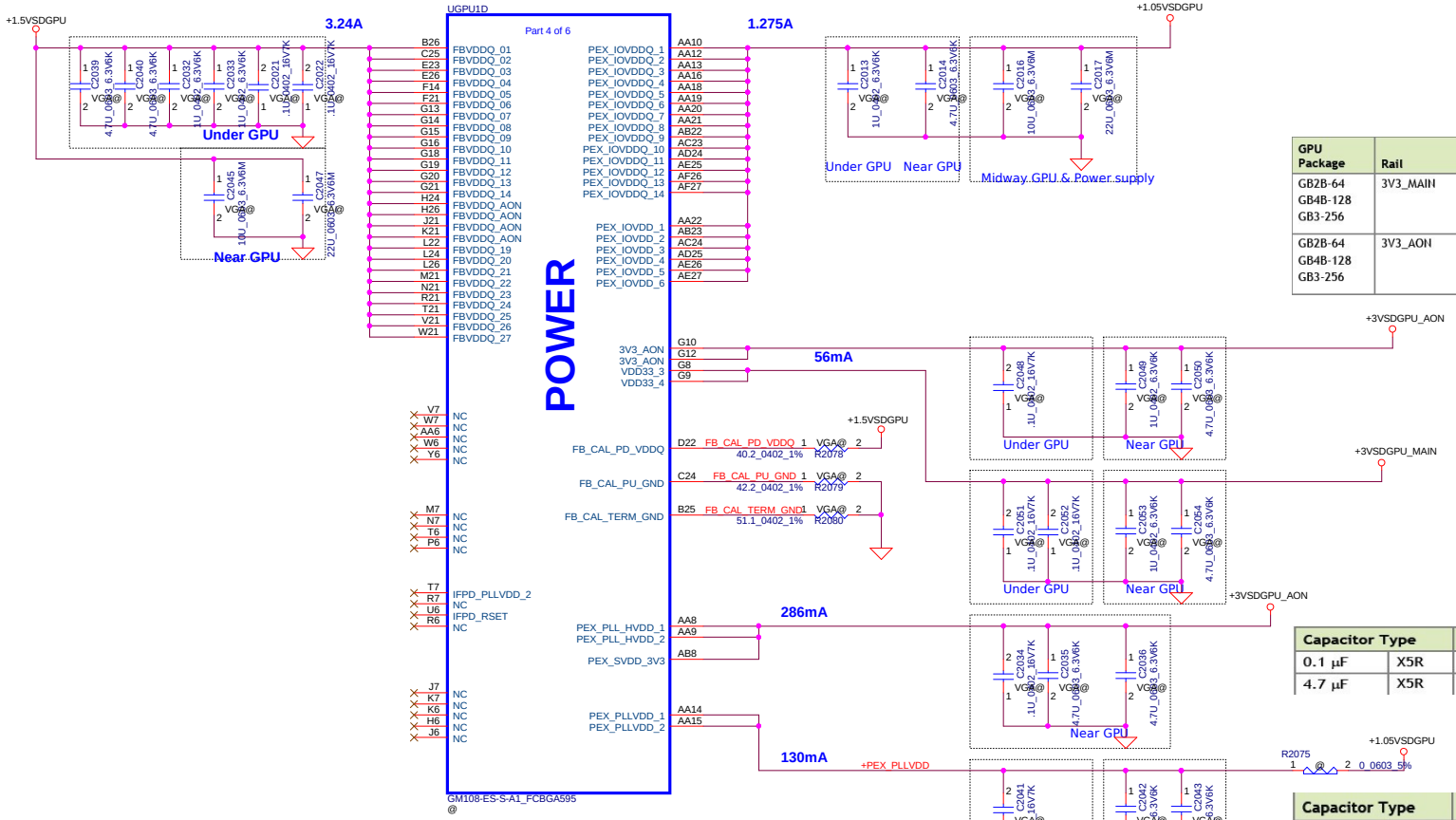

GPU Package	Rail	Capacitor Type		Footprint		Population	Location
GB2B-64 GB4B-128 GB3-256	3V3_MAIN	0.1µF	X6S	0402	2	2	Under GPU
		1 µF	X5R	0603	1	1	Near GPU
		4.7 µF	X5R	0603	1	1	Near GPU
GB2B-64 GB4B-128 GB3-256	3V3_AON	0.1µF	X6S	0402	1	1	Under GPU
		1 µF	X5R	0603	1	1	Near GPU
		4.7 µF	X5R	0603	1	1	Near GPU

Capacitor Type		Footprint	Population	Location
0.1 µF	X5R	0402	1	Near GPU
4.7 µF	X5R	0603	2	Near GPU

Capacitor Type		Footprint	Population	Location
0.1 µF	X6S	0402	1	Under GPU
1.0 µF	X5R	0603	1	Near GPU
4.7 µF	X5R	0805	1	Near GPU

NVIDIA Confidential

Security Classification	Compal Secret Data		
Issued Date	2014/08/28	Deciphered Date	2016/08/28

THIS SHEET OF ENGINEERING DRAWING IS THE PROPRIETARY PROPERTY OF COMPAL ELECTRONICS, INC. AND CONTAINS CONFIDENTIAL AND TRADE SECRET INFORMATION. THIS SHEET MAY NOT BE TRANSFERED FROM THE CUSTODY OF THE COMPETENT DIVISION OF R&D DEPARTMENT EXCEPT AS AUTHORIZED BY COMPAL ELECTRONICS, INC. NEITHER THIS SHEET NOR THE INFORMATION IT CONTAINS MAY BE USED BY OR DISCLOSED TO ANY THIRD PARTY WITHOUT PRIOR WRITTEN CONSENT OF COMPAL ELECTRONICS, INC.

Compal Electronics, Inc.

Title: N16X POWER & GND 4/9

Size: Custom | Document Number: A4WAL_Braswell-M/D_LA-C371P | Rev: 1.0

Date: Wednesday, March 04, 2015 | Sheet 18 of 55

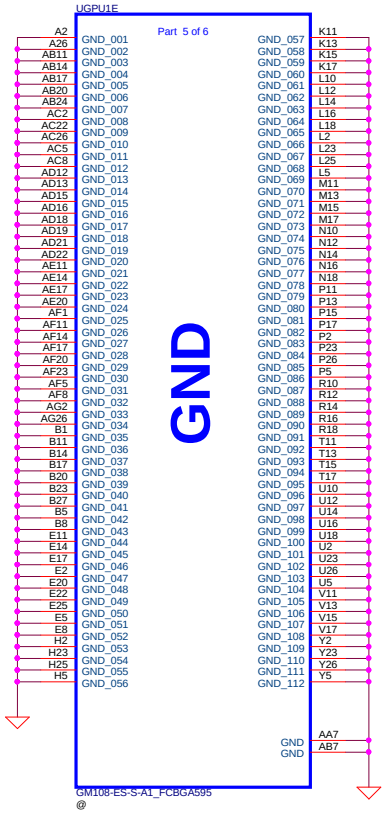

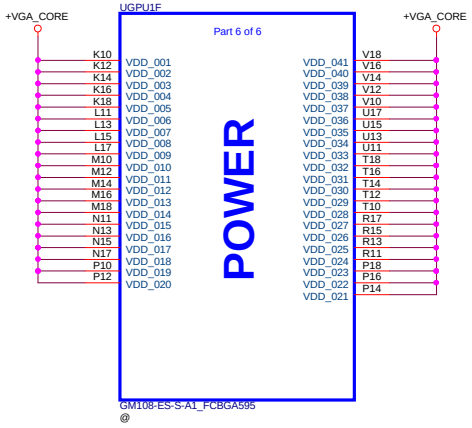

NV 15x DG-06803-V03
NV 16x DG-07158-V04

GPU Package Type	Capacitor Type		Footprint		Population	Location	Comments
GB2B-64	4.7 µF	X6S	0603	10	10	Under GPU	
	1 µF	X6S	0402	4	4	Under GPU	
	47 µF	X5R	0805	1	1	Near GPU	
	22 µF	X5R	0805	1	1	Near GPU	
	4.7 µF	X5R	0805	5	5	Near GPU	
	330 µF	POS	7343	1	1	Near GPU	ESR ≤ 6 mΩ

DA-07312-V02

Table 6. EDP-Peak [3]

Products	VRM Type	GPU Core	GPU FBIO			FB Total [1,5]	1.05V Total [2]
		–	1.5V [4]	1.35V [4]	1.5V [4]	1.35V [4]	1.05V [4]
		(A)	(A)	(A)	(A)	(A)	(A)
N16S-GT	DDR3/L	51	2.56	2.18	4.08	3.63	2.09
N16S-GM	DDR3/L	32	2.56	2.18	4.08	3.62	2.09
N16S-LP	DDR3L	29	N/A	2.13	N/A	3.54	2.09

Notes:

1. FB Total = GPU FBIO + VRAM IO + VRAM Core = FBVDD + FBVDDQ
2. 1.05V Total includes the PCIe and other 1.05V power rails.
3. Worst case current is observed at the temperature of the GPS Thermal Control Limit defined in Table 3.
4. Power supply rail voltages set to maximum DC tolerance.
5. VRAM Total power is for reference only. For absolute ratings, please contact VRAM manufacturer.

DA-07314-V02

Table 6. EDP-Peak [3]

Products	VRM Type	GPU Core	GPU FBIO	FB Total [1,5]	1.05V Total [2]
		–	1.5/1.35V [4]	1.5/1.35V [4]	1.05V [4]
		(A)	(A)	(A)	(A)
N16V-GM	DDR3/L	40.97	3.87	5.86	1.74

Notes:

1. FB Total = GPU FBIO + VRAM IO + VRAM Core = FBVDD + FBVDDQ
2. 1.05V Total includes the PCIe and other 1.05V power rails.
3. Worst case current is observed at the temperature of the GPS Thermal Control Limit defined in Table 3.
4. Power supply rail voltages set to maximum DC tolerance.
5. VRAM Total power is for reference only. For absolute ratings, please contact VRAM manufacturer.

2014.10.15 19:39:56 +
2014.10.15 19:47:05 +
2014.10.15 19:48:0

Security Classification	Compal Secret Data		
Issued Date	2014/08/28	Deciphered Date	2016/08/28

THIS SHEET OF ENGINEERING DRAWING IS THE PROPRIETARY PROPERTY OF COMPAL ELECTRONICS, INC. AND CONTAINS CONFIDENTIAL AND TRADE SECRET INFORMATION. THIS SHEET MAY NOT BE TRANSFERED FROM THE CUSTODY OF THE COMPETENT DIVISION OF R&D DEPARTMENT EXCEPT AS AUTHORIZED BY COMPAL ELECTRONICS, INC. NEITHER THIS SHEET NOR THE INFORMATION IT CONTAINS MAY BE USED BY OR DISCLOSED TO ANY THIRD PARTY WITHOUT PRIOR WRITTEN CONSENT OF COMPAL ELECTRONICS, INC.

Compal Electronics, Inc.

Title: N16X POWER & GND 5/9

Size: Custom | Document Number: A4WAL_Braswell-M/D_LA-C371P | Rev: 1.0

Date: Wednesday, March 04, 2015 | Sheet 19 of 55

VRAM DDR3 chips

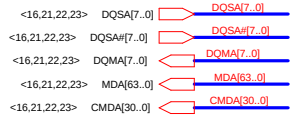

Lower Rank 0 BOT SIDE

X76

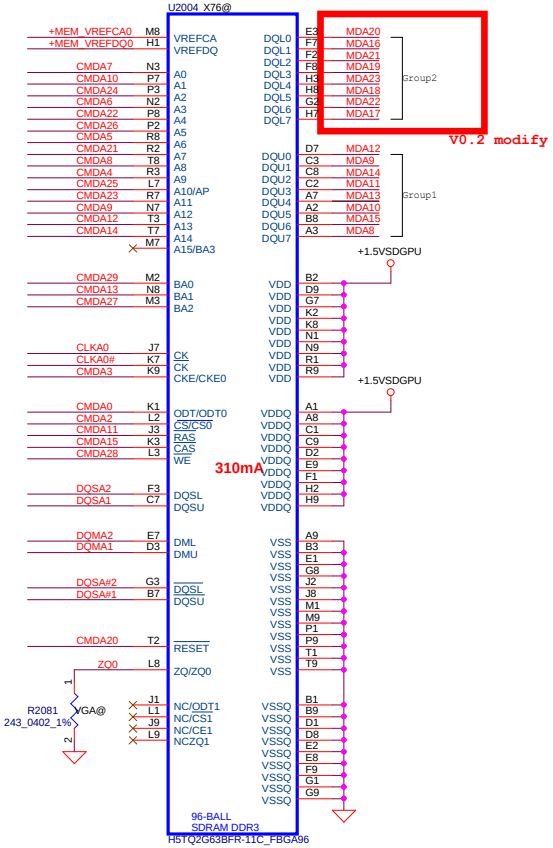

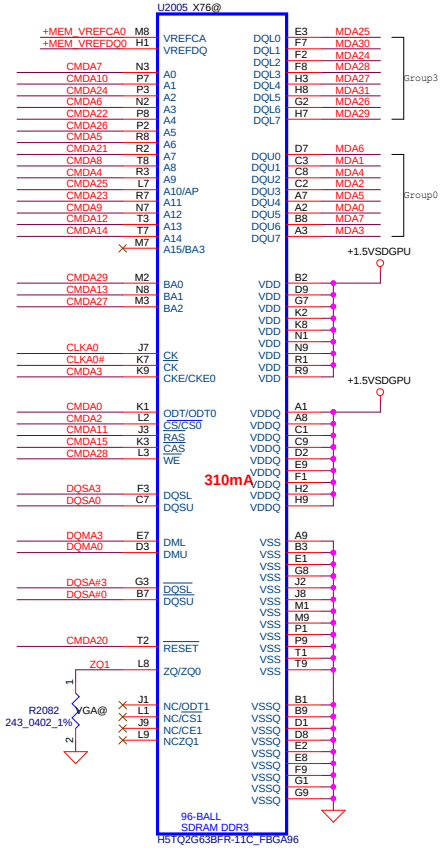

Mode E Address	Rank0		Rank1	
	0..31	32..63	0..31	32..63
CMD0	ODT		ODT	
CMD1			CS1*	
CMD2	CS0*			
CMD3	CKE		CKE	
CMD4	A9	A9	A11	A11
CMD5	A6	A6	A7	A7
CMD6	A3	A3	BA1	BA1
CMD7	A0	A0	A12	A12
CMD8	A8	A8	A8	A8
CMD9	A12	A12	A0	A0
CMD10	A1	A1	A2	A2
CMD11	RAS*	RAS*	RAS*	RAS*
CMD12	A13	A13	A14	A14
CMD13	BA1	BA1	A3	A3
CMD14	A14	A14	A13	A13
CMD15	CAS*	CAS*	CAS*	CAS*
CMD16		ODT		ODT
CMD17				CS1*
CMD18		CS0*		
CMD19		CKE		CKE
CMD20	RST	RST	RST	RST
CMD21	A7	A7	A6	A6
CMD22	A4	A4	A5	A5
CMD23	A11	A11	A9	A9
CMD24	A2	A2	A1	A1
CMD25	A10	A10	WE*	WE*
CMD26	A5	A5	A4	A4
CMD27	BA2	BA2		
CMD28	WE*	WE*	A10	A10
CMD29	BA0	BA0	BA0	BA0
CMD30			BA2	BA2
Not Available				

	Command Bit	Default Pull-down
DDR3	ODTx	10k
	CKEx	10k
	RST	10k
	CS*	No Termination

Table 3-11. DDR3 per Memory FBVDD/Q Decoupling

Capacitor Type			Population FBVDDQ	Population FBVDD	Location
FBVDD/Q Combined					
0.1 µF	X7R	0402	2		Under DRAM
1.0 µF	X7R	0603	4		Under DRAM
10 µF	X5R	0805	0		Close to DRAM

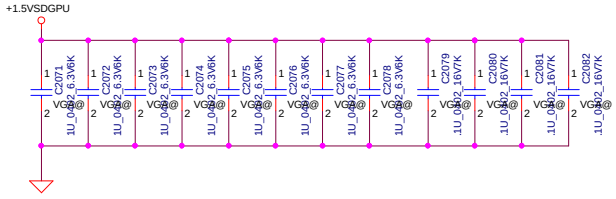

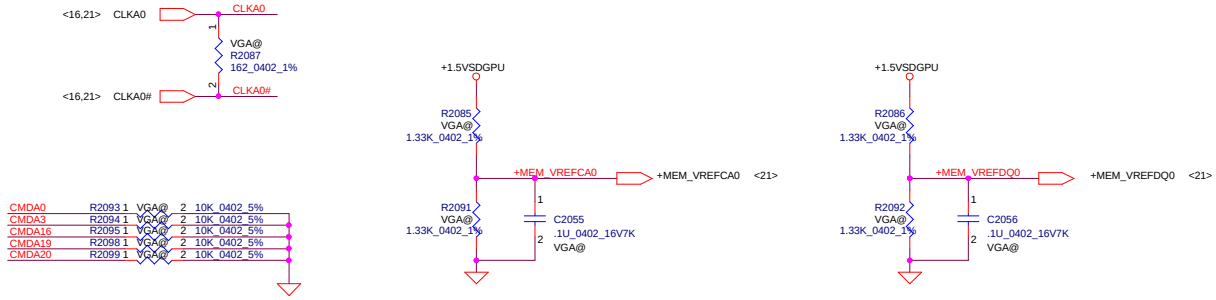

Security Classification	Compal Secret Data		
Issued Date	2014/08/28	Deciphered Date	2016/08/28

THIS SHEET OF ENGINEERING DRAWING IS THE PROPRIETARY PROPERTY OF COMPAL ELECTRONICS, INC. AND CONTAINS CONFIDENTIAL AND TRADE SECRET INFORMATION. THIS SHEET MAY NOT BE TRANSFERED FROM THE CUSTODY OF THE COMPETENT DIVISION OF R&D DEPARTMENT EXCEPT AS AUTHORIZED BY COMPAL ELECTRONICS, INC. NEITHER THIS SHEET NOR THE INFORMATION IT CONTAINS MAY BE USED BY OR DISCLOSED TO ANY THIRD PARTY WITHOUT PRIOR WRITTEN CONSENT OF COMPAL ELECTRONICS, INC.

Compal Electronics, Inc.

Title: **N16X Upper Rank0 6/9**

Size: Custom | Document Number: **A4WAL_Braswell-M/D_LA-C371P** | Rev: 1.0

Date: Wednesday, March 04, 2015 | Sheet 20 of 55

VRAM DDR3 chips

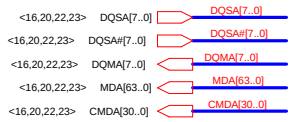

Lower Rank 1 TOP SIDE

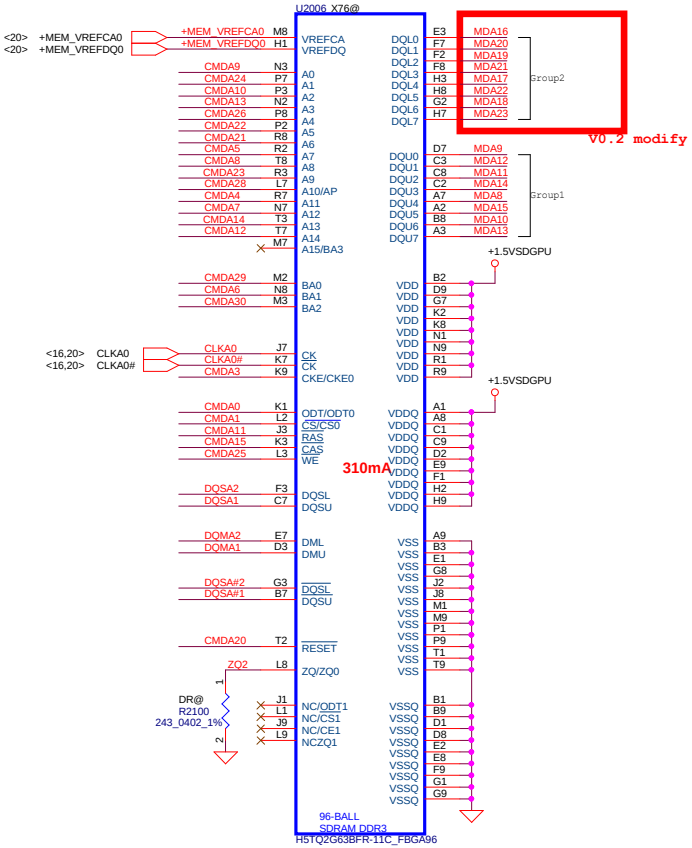

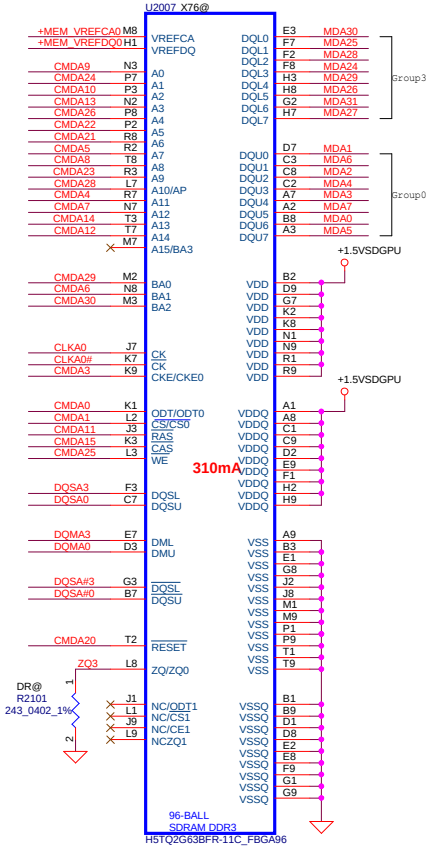

Mode E Address	Rank0		Rank1	
	0..31	32..63	0..31	32..63
CMD0	ODT		ODT	
CMD1			CS1*	
CMD2	CS0*			
CMD3	CKE		CKE	
CMD4	A9	A9	A11	A11
CMD5	A6	A6	A7	A7
CMD6	A3	A3	BA1	BA1
CMD7	A0	A0	A12	A12
CMD8	A8	A8	A8	A8
CMD9	A12	A12	A0	A0
CMD10	A1	A1	A2	A2
CMD11	RAS*	RAS*	RAS*	RAS*
CMD12	A13	A13	A14	A14
CMD13	BA1	BA1	A3	A3
CMD14	A14	A14	A13	A13
CMD15	CAS*	CAS*	CAS*	CAS*
CMD16		ODT		ODT
CMD17				CS1*
CMD18		CS0*		
CMD19		CKE		CKE
CMD20	RST	RST	RST	RST
CMD21	A7	A7	A6	A6
CMD22	A4	A4	A5	A5
CMD23	A11	A11	A9	A9
CMD24	A2	A2	A1	A1
CMD25	A10	A10	WE*	WE*
CMD26	A5	A5	A4	A4
CMD27	BA2	BA2		
CMD28	WE*	WE*	A10	A10
CMD29	BA0	BA0	BA0	BA0
CMD30			BA2	BA2
Not Available				

	Command Bit	Default Pull-down
DDR3	ODTx	10k
	CKEx	10k
	RST	10k
	CS*	No Termination

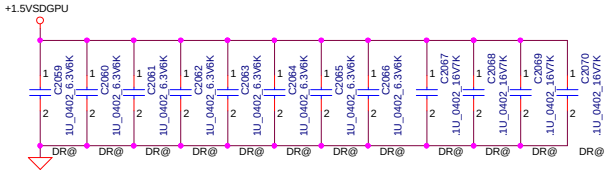

Security Classification	Compal Secret Data		
Issued Date	2014/08/28	Deciphered Date	2016/08/28

THIS SHEET OF ENGINEERING DRAWING IS THE PROPRIETARY PROPERTY OF COMPAL ELECTRONICS, INC. AND CONTAINS CONFIDENTIAL AND TRADE SECRET INFORMATION. THIS SHEET MAY NOT BE TRANSFERED FROM THE CUSTODY OF THE COMPETENT DIVISION OF R&D DEPARTMENT EXCEPT AS AUTHORIZED BY COMPAL ELECTRONICS, INC. NEITHER THIS SHEET NOR THE INFORMATION IT CONTAINS MAY BE USED BY OR DISCLOSED TO ANY THIRD PARTY WITHOUT PRIOR WRITTEN CONSENT OF COMPAL ELECTRONICS, INC.

Compal Electronics, Inc.

Title: **N16X Upper Rank1 7/9**

Size: Custom | Document Number: **A4WAL_Braswell-M/D_LA-C371P** | Rev: 1.0

Date: Wednesday, March 04, 2015 | Sheet 21 of 55

VRAM DDR3 chips

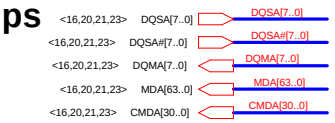

Upper Rank 0 BOT SIDE

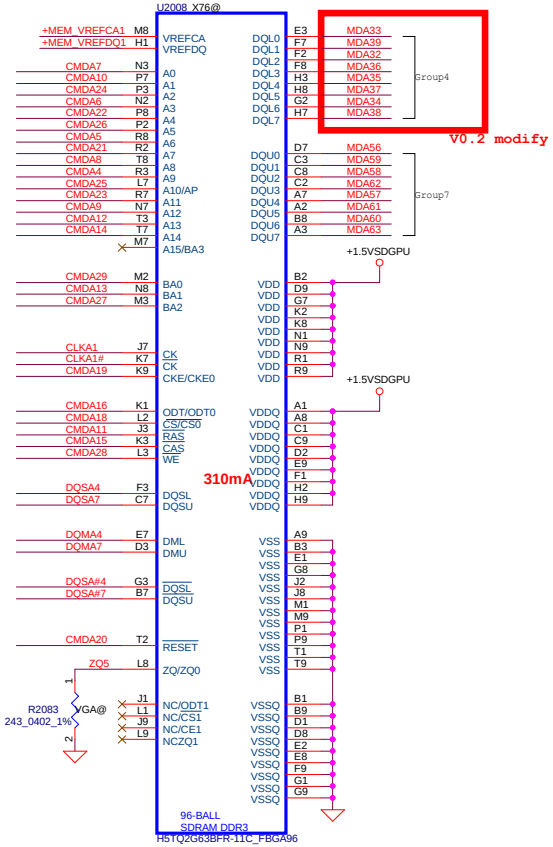

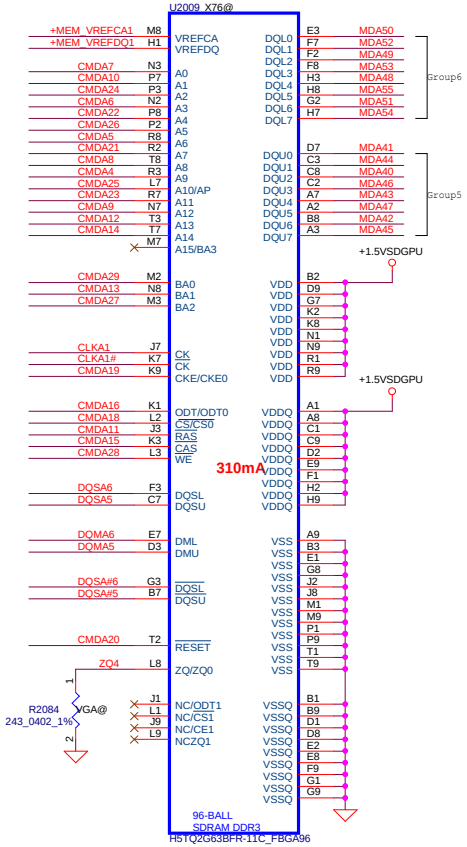

Mode E Address	Rank0		Rank1	
	0..31	32..63	0..31	32..63
CMD0	ODT		ODT	
CMD1			CS1*	
CMD2	CS0*			
CMD3	CKE		CKE	
CMD4	A9	A9	A11	A11
CMD5	A6	A6	A7	A7
CMD6	A3	A3	BA1	BA1
CMD7	A0	A0	A12	A12
CMD8	A8	A8	A8	A8
CMD9	A12	A12	A0	A0
CMD10	A1	A1	A2	A2
CMD11	RAS*	RAS*	RAS*	RAS*
CMD12	A13	A13	A14	A14
CMD13	BA1	BA1	A3	A3
CMD14	A14	A14	A13	A13
CMD15	CAS*	CAS*	CAS*	CAS*
CMD16		ODT		ODT
CMD17				CS1*
CMD18		CS0*		
CMD19		CKE		CKE
CMD20	RST	RST	RST	RST
CMD21	A7	A7	A6	A6
CMD22	A4	A4	A5	A5
CMD23	A11	A11	A9	A9
CMD24	A2	A2	A1	A1
CMD25	A10	A10	WE*	WE*
CMD26	A5	A5	A4	A4
CMD27	BA2	BA2		
CMD28	WE*	WE*	A10	A10
CMD29	BA0	BA0	BA0	BA0
CMD30			BA2	BA2
Not Available				

	Command Bit	Default Pull-down
DDR3	ODTx	10k
	CKEx	10k
	RST	10k
	CS*	No Termination

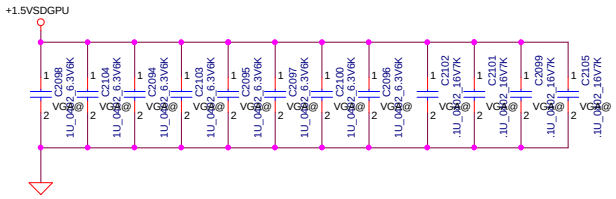

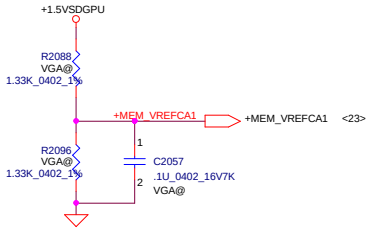

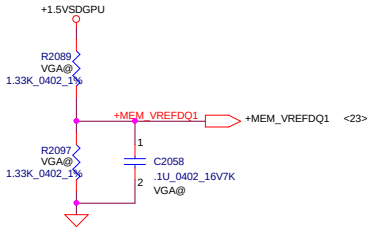

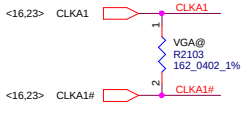

Security Classification	Compal Secret Data		
Issued Date	2014/08/28	Deciphered Date	2016/08/28

THIS SHEET OF ENGINEERING DRAWING IS THE PROPRIETARY PROPERTY OF COMPAL ELECTRONICS, INC. AND CONTAINS CONFIDENTIAL AND TRADE SECRET INFORMATION. THIS SHEET MAY NOT BE TRANSFERED FROM THE CUSTODY OF THE COMPETENT DIVISION OF R&D DEPARTMENT EXCEPT AS AUTHORIZED BY COMPAL ELECTRONICS, INC. NEITHER THIS SHEET NOR THE INFORMATION IT CONTAINS MAY BE USED BY OR DISCLOSED TO ANY THIRD PARTY WITHOUT PRIOR WRITTEN CONSENT OF COMPAL ELECTRONICS, INC.

Compal Electronics, Inc.

Title: N16X Lower Rank0 8/9

Size: Custom | Document Number: A4WAL_Braswell-M/D_LA-C371P | Rev: 1.0

Date: Wednesday, March 04, 2015 | Sheet 22 of 55

VRAM DDR3 chips

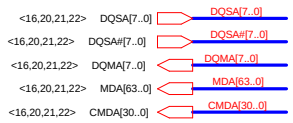

Upper Rank 1 TOP SIDE

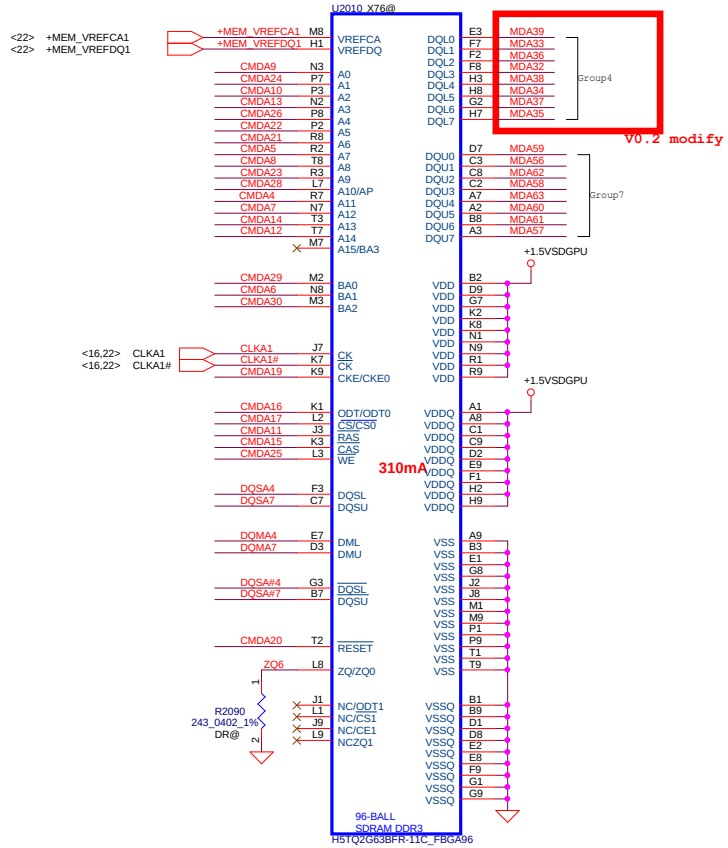

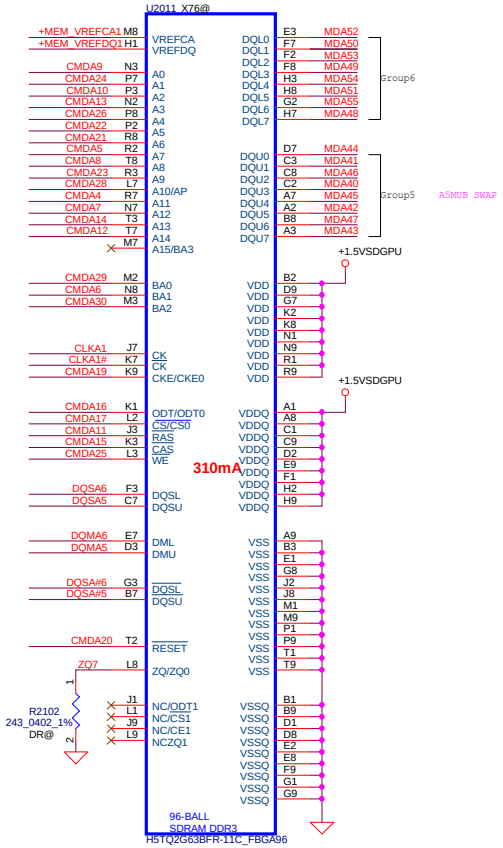

Mode E Address	Rank0		Rank1	
	0..31	32..63	0..31	32..63
CMD0	ODT		ODT	
CMD1			CS1*	
CMD2	CS0*			
CMD3	CKE		CKE	
CMD4	A9	A9	A11	A11
CMD5	A6	A6	A7	A7
CMD6	A3	A3	BA1	BA1
CMD7	A0	A0	A12	A12
CMD8	A8	A8	A8	A8
CMD9	A12	A12	A0	A0
CMD10	A1	A1	A2	A2
CMD11	RAS*	RAS*	RAS*	RAS*
CMD12	A13	A13	A14	A14
CMD13	BA1	BA1	A3	A3
CMD14	A14	A14	A13	A13
CMD15	CAS*	CAS*	CAS*	CAS*
CMD16		ODT		ODT
CMD17				CS1*
CMD18		CS0*		
CMD19		CKE		CKE
CMD20	RST	RST	RST	RST
CMD21	A7	A7	A6	A6
CMD22	A4	A4	A5	A5
CMD23	A11	A11	A9	A9
CMD24	A2	A2	A1	A1
CMD25	A10	A10	WE*	WE*
CMD26	A5	A5	A4	A4
CMD27	BA2	BA2		
CMD28	WE*	WE*	A10	A10
CMD29	BA0	BA0	BA0	BA0
CMD30			BA2	BA2
Not Available				

	Command Bit	Default Pull-down
DDR3	ODTx	10k
	CKEx	10k
	RST	10k
	CS*	No Termination

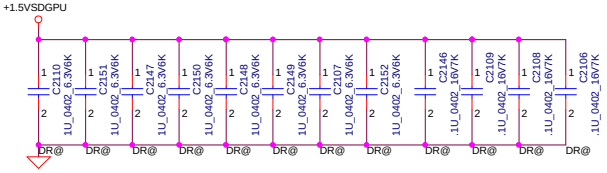

Security Classification	Compal Secret Data		
Issued Date	2014/08/28	Deciphered Date	2016/08/28

THIS SHEET OF ENGINEERING DRAWING IS THE PROPRIETARY PROPERTY OF COMPAL ELECTRONICS, INC. AND CONTAINS CONFIDENTIAL AND TRADE SECRET INFORMATION. THIS SHEET MAY NOT BE TRANSFERED FROM THE CUSTODY OF THE COMPETENT DIVISION OF R&D DEPARTMENT EXCEPT AS AUTHORIZED BY COMPAL ELECTRONICS, INC. NEITHER THIS SHEET NOR THE INFORMATION IT CONTAINS MAY BE USED BY OR DISCLOSED TO ANY THIRD PARTY WITHOUT PRIOR WRITTEN CONSENT OF COMPAL ELECTRONICS, INC.

Compal Electronics, Inc.

Title: **N16X Lower Rank1 9/9**

Size: Custom | Document Number: **A4WAL_Braswell-M/D_LA-C371P** | Rev: 1.0

Date: Wednesday, March 04, 2015 | Sheet 23 of 55

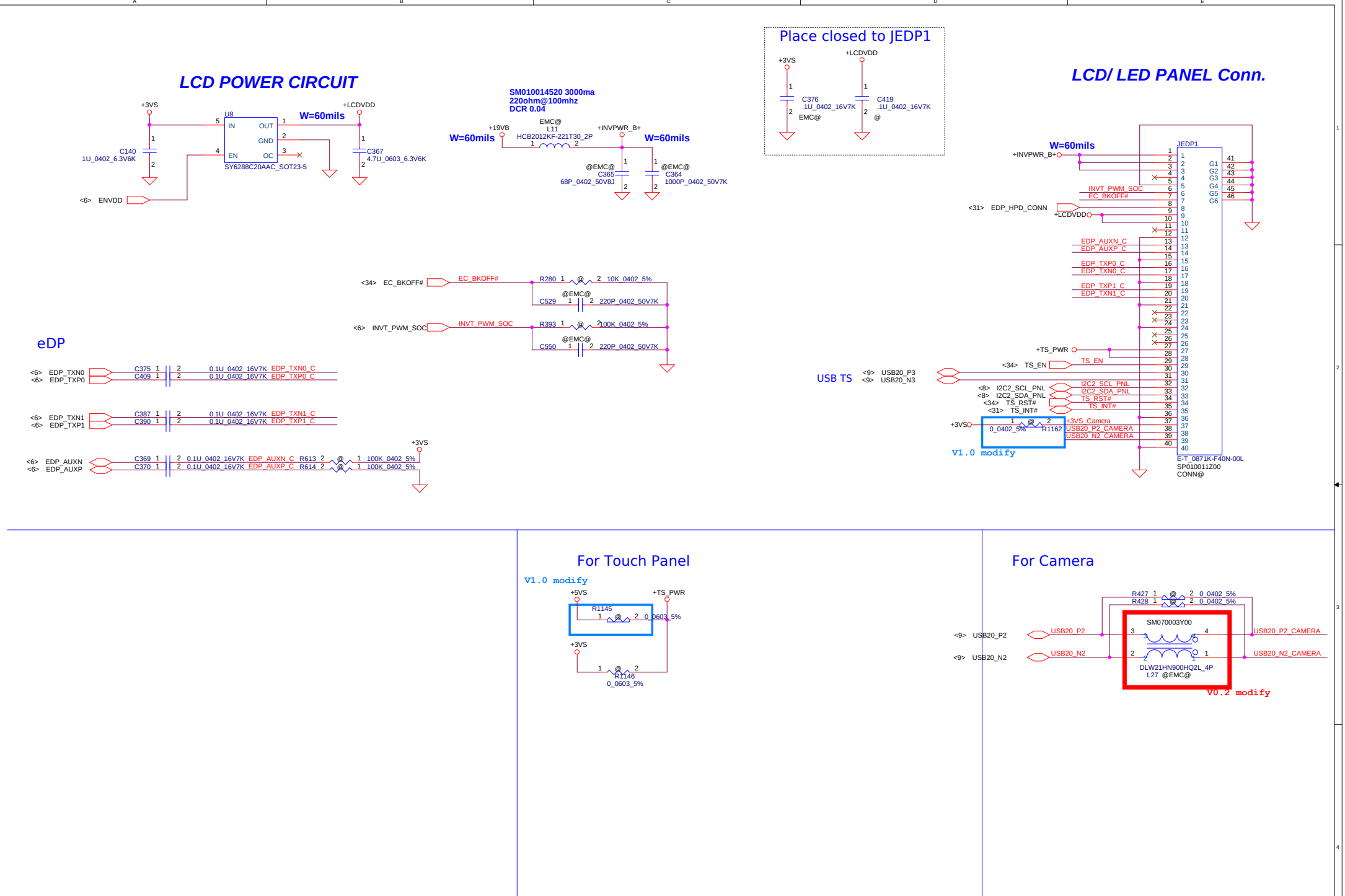

Security Classification	Compal Secret Data		
Issued Date	2014/03/19	Deciphered Date	2015/03/18

THIS SHEET OF ENGINEERING DRAWING IS THE PROPRIETARY PROPERTY OF COMPAL ELECTRONICS, INC. AND CONTAINS CONFIDENTIAL AND TRADE SECRET INFORMATION. THIS SHEET MAY NOT BE TRANSFERED FROM THE CUSTODY OF THE COMPETENT DIVISION OF R&D DEPARTMENT EXCEPT AS AUTHORIZED BY COMPAL ELECTRONICS, INC. NEITHER THIS SHEET NOR THE INFORMATION IT CONTAINS MAY BE USED BY OR DISCLOSED TO ANY THIRD PARTY WITHOUT PRIOR WRITTEN CONSENT OF COMPAL ELECTRONICS, INC.

Compal Electronics, Inc.

Title: eDP CONN.

Size: Custom | Document Number: A4WAL Braswell-M/D LA-C371P | Rev: 1.0

Date: Wednesday, March 04, 2015 | Sheet 24 of 55

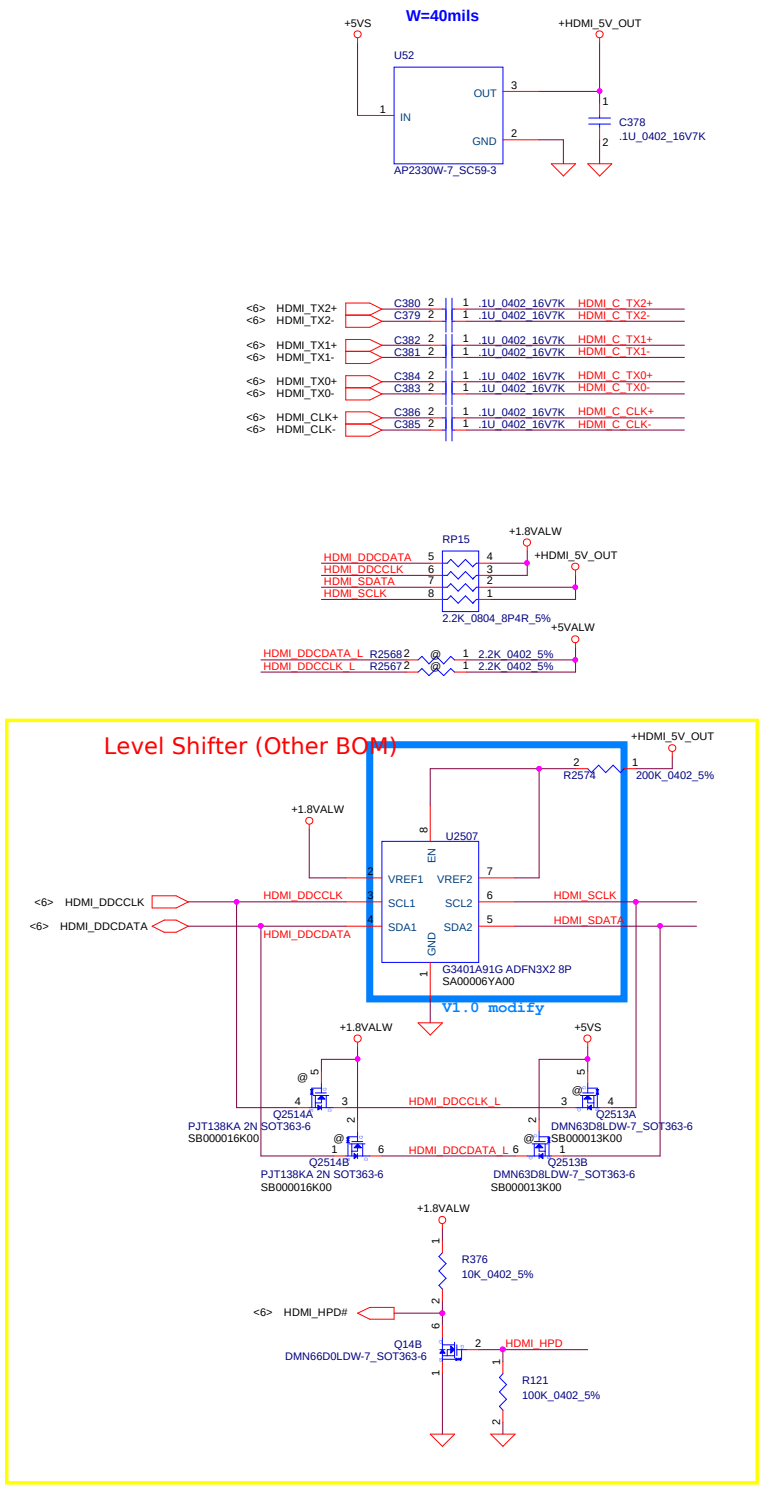

Security Classification	Compal Secret Data		
Issued Date	2014/03/19	Deciphered Date	2015/03/18

THIS SHEET OF ENGINEERING DRAWING IS THE PROPRIETARY PROPERTY OF COMPAL ELECTRONICS, INC. AND CONTAINS CONFIDENTIAL AND TRADE SECRET INFORMATION. THIS SHEET MAY NOT BE TRANSFERED FROM THE CUSTODY OF THE COMPETENT DIVISION OF R&D DEPARTMENT EXCEPT AS AUTHORIZED BY COMPAL ELECTRONICS, INC. NEITHER THIS SHEET NOR THE INFORMATION IT CONTAINS MAY BE USED BY OR DISCLOSED TO ANY THIRD PARTY WITHOUT PRIOR WRITTEN CONSENT OF COMPAL ELECTRONICS, INC.

Compal Electronics, Inc.

Title: HDMI CONN.

Size: Custom | Document Number: A4WAL Braswell-M/D LA-C371P | Rev: 1.0

Date: Wednesday, March 04, 2015 | Sheet 25 of 55

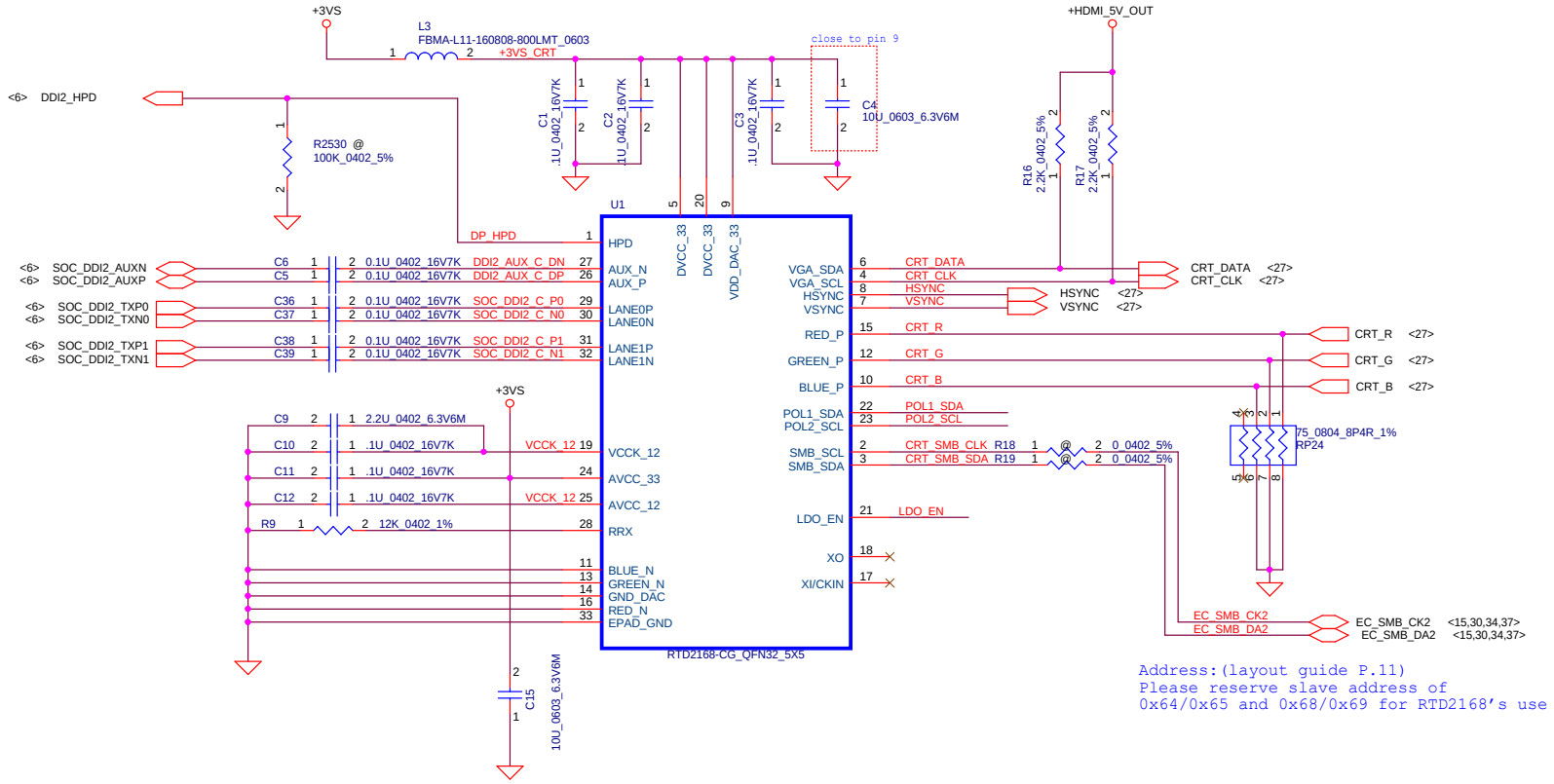

		POL_SDA	
		0	1
POL_SCL	0	X	EP
	1	*ROM	EEPROM

ROM: Internal ROM
EP: Programmed external EC
EEPROM: External ROM

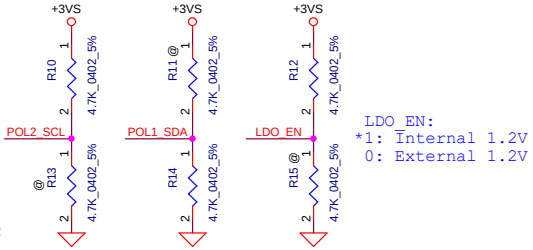

LDO_EN:
*1: Internal 1.2V
0: External 1.2V

Security Classification	Compal Secret Data		Compal Electronics, Inc.
Issued Date	2014/08/28	Deciphered Date 2016/08/28	Title: Realtek RTD2168
THIS SHEET OF ENGINEERING DRAWING IS THE PROPRIETARY PROPERTY OF COMPAL ELECTRONICS, INC. AND CONTAINS CONFIDENTIAL AND TRADE SECRET INFORMATION. THIS SHEET MAY NOT BE TRANSFERED FROM THE CUSTODY OF THE COMPETENT DIVISION OF R&D DEPARTMENT EXCEPT AS AUTHORIZED BY COMPAL ELECTRONICS, INC. NEITHER THIS SHEET NOR THE INFORMATION IT CONTAINS MAY BE USED BY OR DISCLOSED TO ANY THIRD PARTY WITHOUT PRIOR WRITTEN CONSENT OF COMPAL ELECTRONICS, INC.			Size: Custom; Document Number: A4WAL_Braswell-M/D_LA-C371P; Rev: 1.0
			Date: Wednesday, March 04, 2015; Sheet 26 of 55

CRT conn.

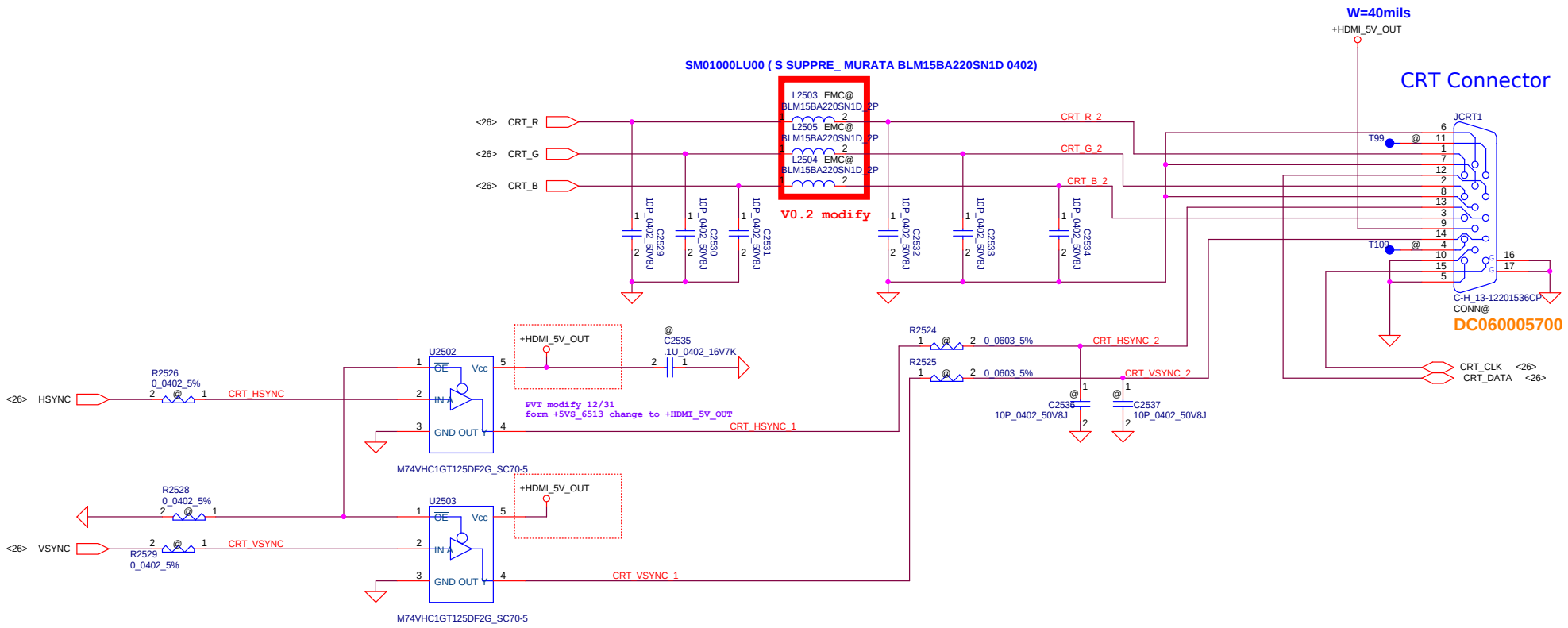

Security Classification	Compal Secret Data		Compal Electronics, Inc.
Issued Date	2014/08/28	Deciphered Date 2016/08/28	Title: CRT Connector
THIS SHEET OF ENGINEERING DRAWING IS THE PROPRIETARY PROPERTY OF COMPAL ELECTRONICS, INC. AND CONTAINS CONFIDENTIAL AND TRADE SECRET INFORMATION. THIS SHEET MAY NOT BE TRANSFERED FROM THE CUSTODY OF THE COMPETENT DIVISION OF R&D DEPARTMENT EXCEPT AS AUTHORIZED BY COMPAL ELECTRONICS, INC. NEITHER THIS SHEET NOR THE INFORMATION IT CONTAINS MAY BE USED BY OR DISCLOSED TO ANY THIRD PARTY WITHOUT PRIOR WRITTEN CONSENT OF COMPAL ELECTRONICS, INC.			Size: Custom; Document Number: A4WAL_Braswell-M/D_LA-C371P; Rev: 1.0
			Date: Wednesday, March 04, 2015; Sheet 27 of 55

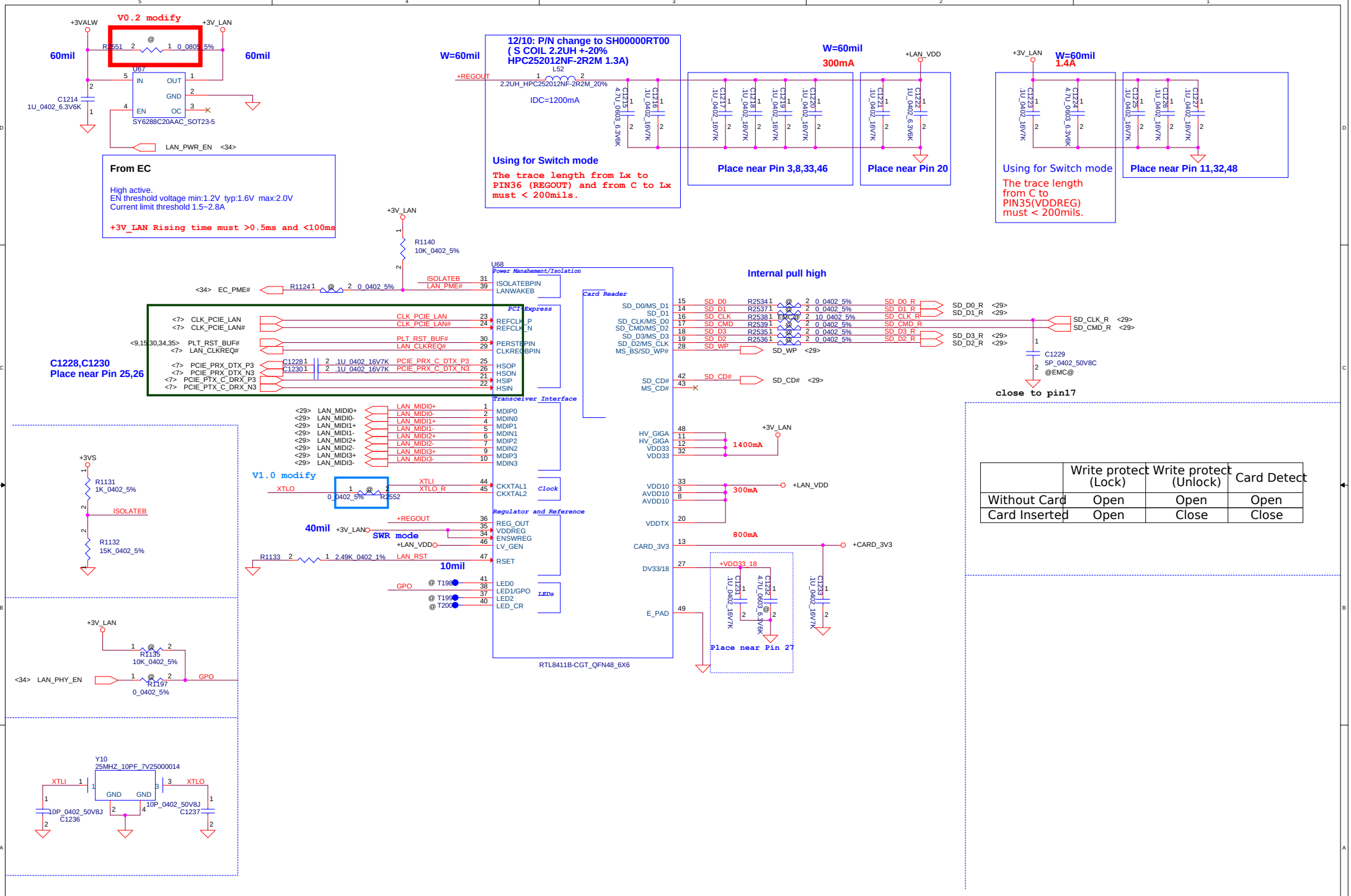

	Write protect (Lock)	Write protect (Unlock)	Card Detect
Without Card	Open	Open	Open
Card Inserted	Open	Close	Close

Security Classification	Compal Secret Data		
Issued Date	2014/03/19	Deciphered Date	2015/03/18

THIS SHEET OF ENGINEERING DRAWING IS THE PROPRIETARY PROPERTY OF COMPAL ELECTRONICS, INC. AND CONTAINS CONFIDENTIAL AND TRADE SECRET INFORMATION. THIS SHEET MAY NOT BE TRANSFERED FROM THE CUSTODY OF THE COMPETENT DIVISION OF R&D DEPARTMENT EXCEPT AS AUTHORIZED BY COMPAL ELECTRONICS, INC. NEITHER THIS SHEET NOR THE INFORMATION IT CONTAINS MAY BE USED BY OR DISCLOSED TO ANY THIRD PARTY WITHOUT PRIOR WRITTEN CONSENT OF COMPAL ELECTRONICS, INC.

Compal Electronics, Inc.

Title: LAN RTL8411B-CG

Size: Custom | Document Number: A4WAL_Braswell-M/D_LA-C371P | Rev: 1.0

Date: Wednesday, March 04, 2015 | Sheet 28 of 55

LAN Connector

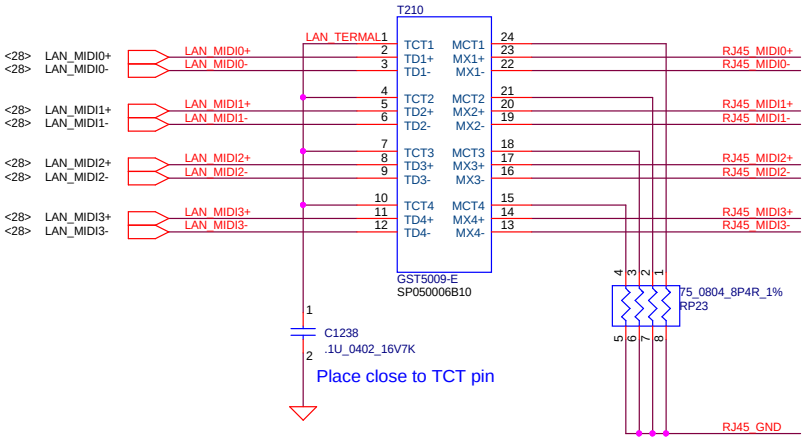

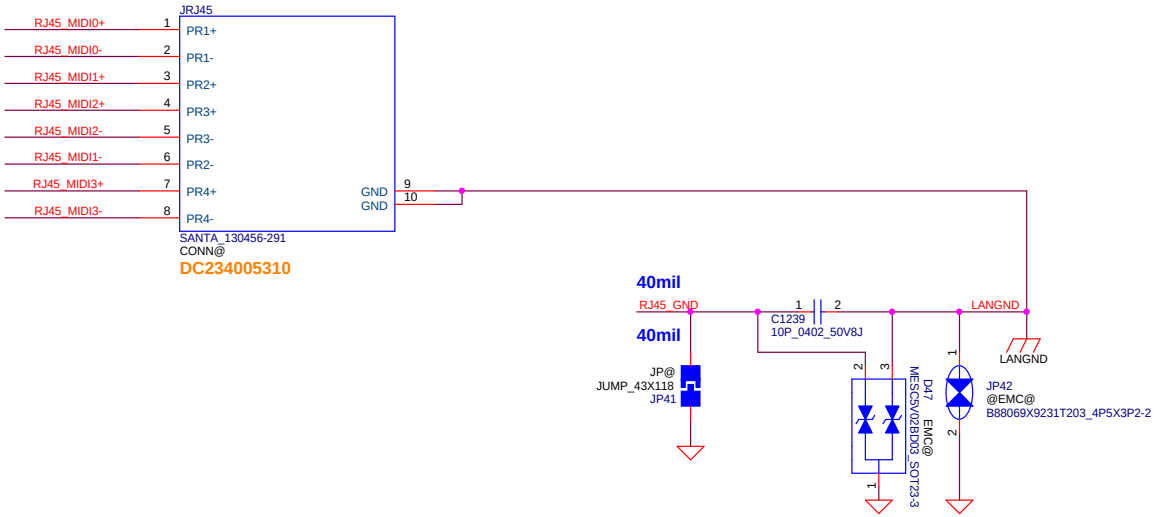

Card Reader Connector

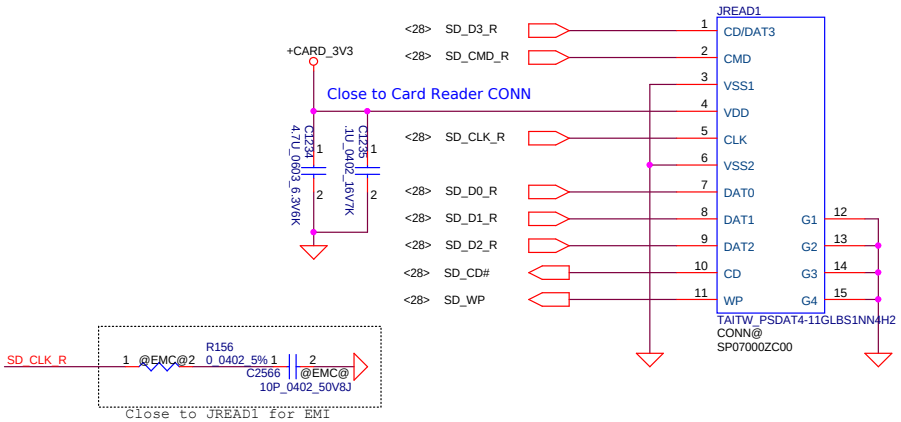

Security Classification	Compal Secret Data			Compal Electronics, Inc.
Issued Date	2014/08/28	Deciphered Date	2016/08/28	Title: LAN RJ45/CR SD Connector
THIS SHEET OF ENGINEERING DRAWING IS THE PROPRIETARY PROPERTY OF COMPAL ELECTRONICS, INC. AND CONTAINS CONFIDENTIAL AND TRADE SECRET INFORMATION. THIS SHEET MAY NOT BE TRANSFERED FROM THE CUSTODY OF THE COMPETENT DIVISION OF R&D DEPARTMENT EXCEPT AS AUTHORIZED BY COMPAL ELECTRONICS, INC. NEITHER THIS SHEET NOR THE INFORMATION IT CONTAINS MAY BE USED BY OR DISCLOSED TO ANY THIRD PARTY WITHOUT PRIOR WRITTEN CONSENT OF COMPAL ELECTRONICS, INC.				Size: Custom; Document Number: A4WAL_Braswell-M/D_LA-C371P; Rev: 1.0
				Date: Wednesday, March 04, 2015; Sheet 29 of 55

For Wireless LAN

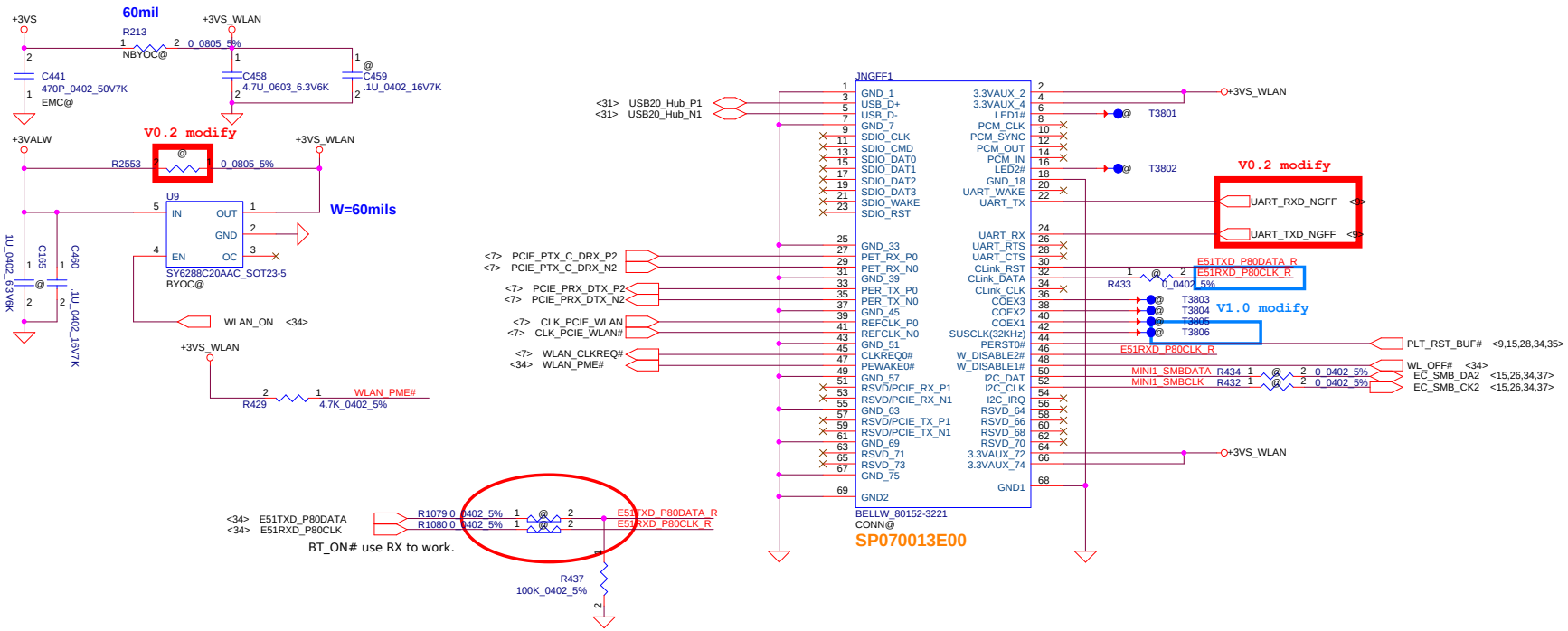

NGFF WL+BT (KEY E)

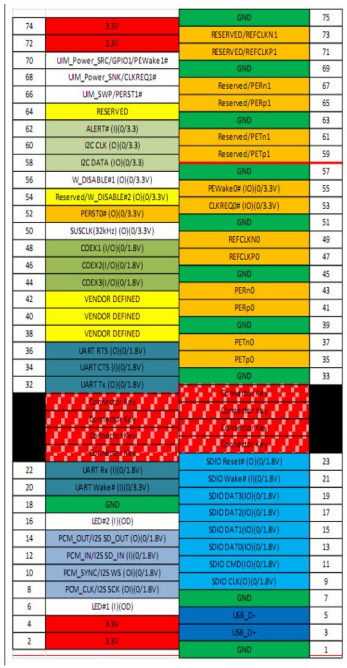

Security Classification	Compal Secret Data		
Issued Date	2014/03/19	Deciphered Date	2015/03/18

THIS SHEET OF ENGINEERING DRAWING IS THE PROPRIETARY PROPERTY OF COMPAL ELECTRONICS, INC. AND CONTAINS CONFIDENTIAL AND TRADE SECRET INFORMATION. THIS SHEET MAY NOT BE TRANSFERED FROM THE CUSTODY OF THE COMPETENT DIVISION OF R&D DEPARTMENT EXCEPT AS AUTHORIZED BY COMPAL ELECTRONICS, INC. NEITHER THIS SHEET NOR THE INFORMATION IT CONTAINS MAY BE USED BY OR DISCLOSED TO ANY THIRD PARTY WITHOUT PRIOR WRITTEN CONSENT OF COMPAL ELECTRONICS, INC.

Compal Electronics, Inc.

Title: **NGFF WLAN**

Size: Custom | Document Number: A4WAL_Braswell-M/D_LA-C371P | Rev: 1.0

Date: Wednesday, March 04, 2015 | Sheet 30 of 55

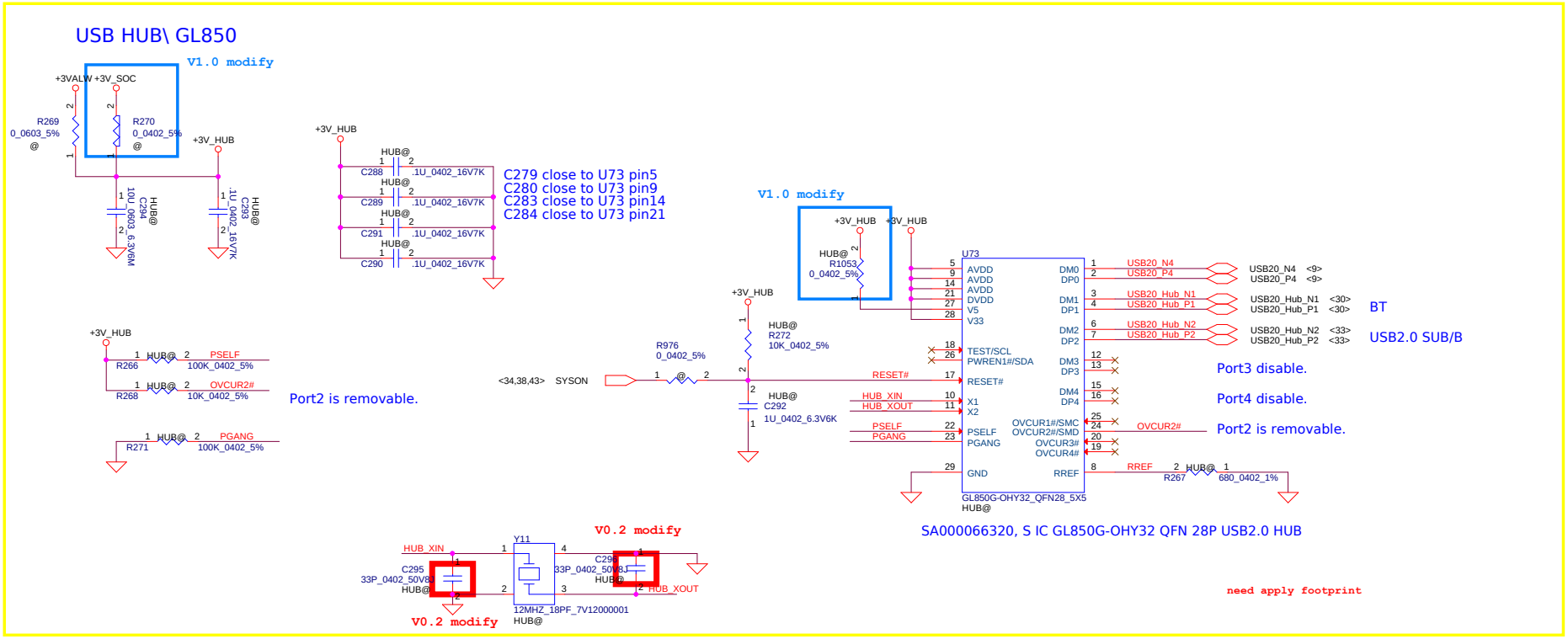

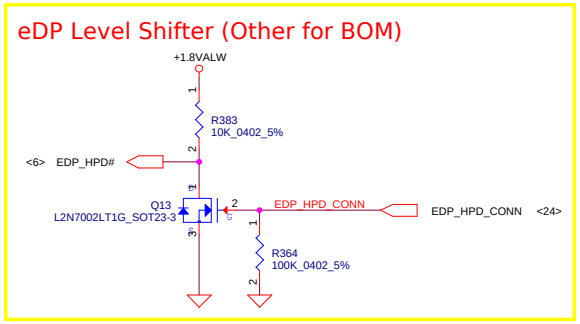

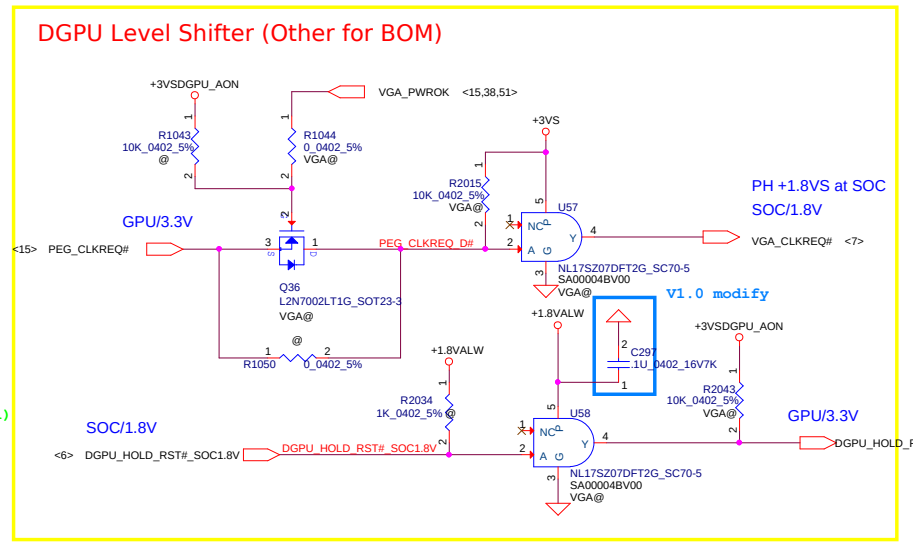

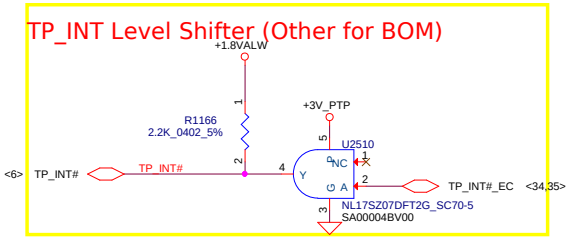

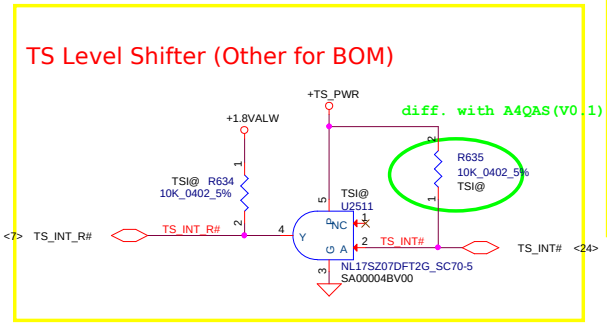

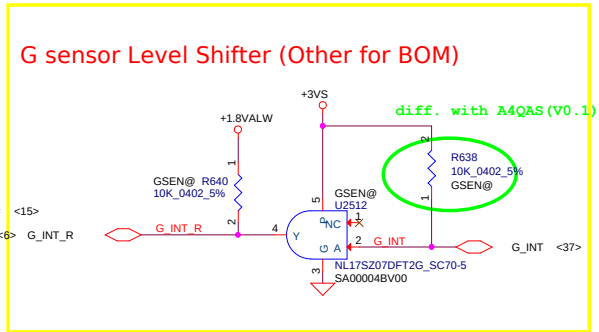

Security Classification	Compal Secret Data			Compal Electronics, Inc.
Issued Date	2013./02/04	Deciphered Date	2015/03/18	Title: USB Hub GL850G& Reset Button
THIS SHEET OF ENGINEERING DRAWING IS THE PROPRIETARY PROPERTY OF COMPAL ELECTRONICS, INC. AND CONTAINS CONFIDENTIAL AND TRADE SECRET INFORMATION. THIS SHEET MAY NOT BE TRANSFERED FROM THE CUSTODY OF THE COMPETENT DIVISION OF R&D DEPARTMENT EXCEPT AS AUTHORIZED BY COMPAL ELECTRONICS, INC. NEITHER THIS SHEET NOR THE INFORMATION IT CONTAINS MAY BE USED BY OR DISCLOSED TO ANY THIRD PARTY WITHOUT PRIOR WRITTEN CONSENT OF COMPAL ELECTRONICS, INC.				Size: Custom / Document Number: A4WAL_Braswell-M/D_LA-C371P / Rev: 1.0
				Date: Wednesday, March 04, 2015 / Sheet 31 of 55

SATA HDD1 Conn.

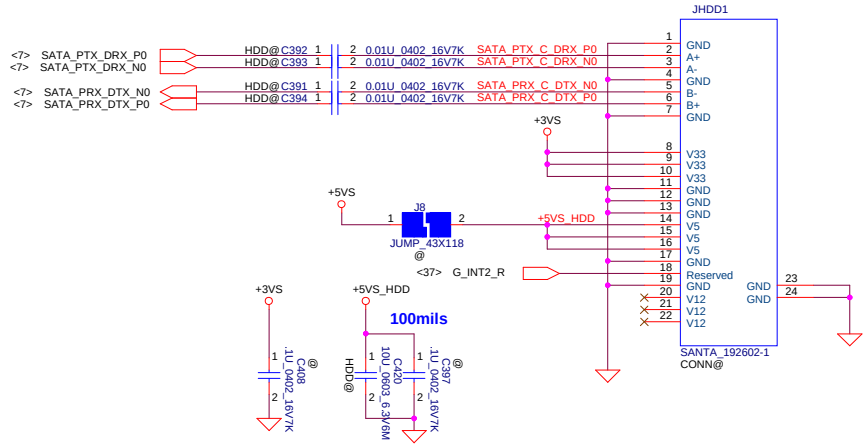

SATA ODD Conn.

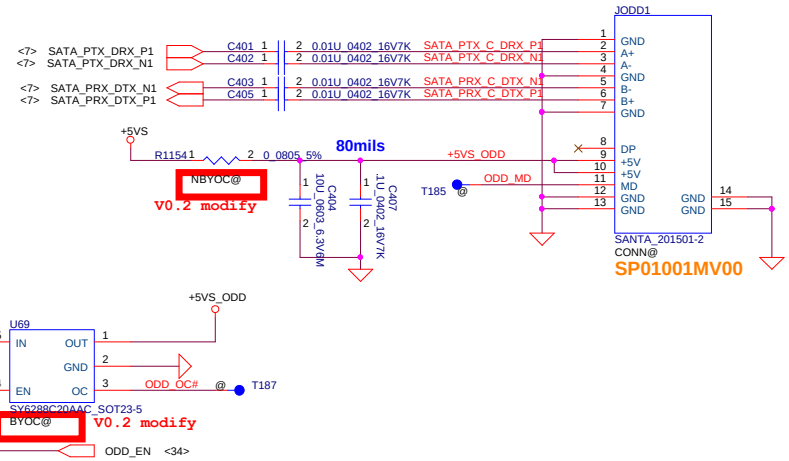

SATA HDD Conn.

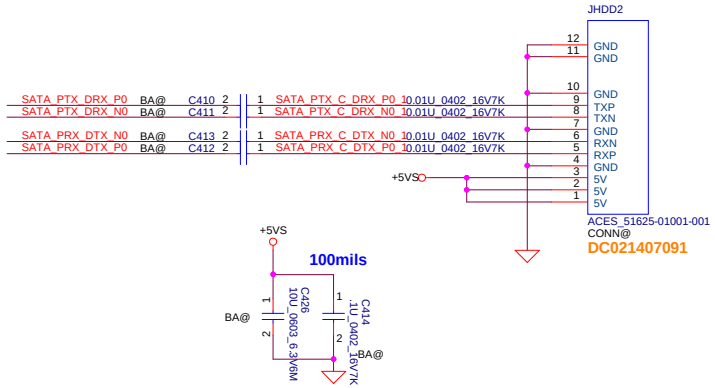

Security Classification	Compal Secret Data		Compal Electronics, Inc.
Issued Date	2014/03/19	Deciphered Date 2015/03/18	Title HDD/ODD/FAN
THIS SHEET OF ENGINEERING DRAWING IS THE PROPRIETARY PROPERTY OF COMPAL ELECTRONICS, INC. AND CONTAINS CONFIDENTIAL AND TRADE SECRET INFORMATION. THIS SHEET MAY NOT BE TRANSFERED FROM THE CUSTODY OF THE COMPETENT DIVISION OF R&D DEPARTMENT EXCEPT AS AUTHORIZED BY COMPAL ELECTRONICS, INC. NEITHER THIS SHEET NOR THE INFORMATION IT CONTAINS MAY BE USED BY OR DISCLOSED TO ANY THIRD PARTY WITHOUT PRIOR WRITTEN CONSENT OF COMPAL ELECTRONICS, INC.			Size Custom / Document Number A4WAL_Braswell-M/D_LA-C371P / Rev 1.0
			Date: Wednesday, March 04, 2015 / Sheet 32 of 55

USB3.0 Port 0

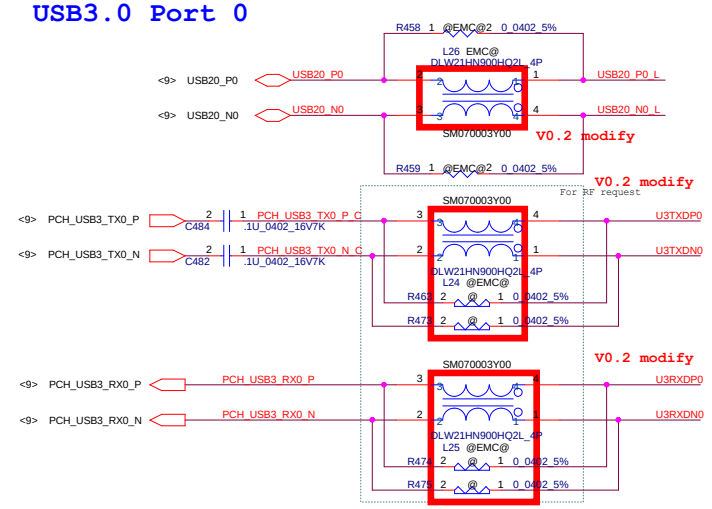

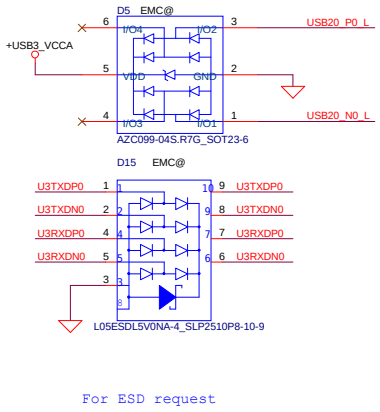

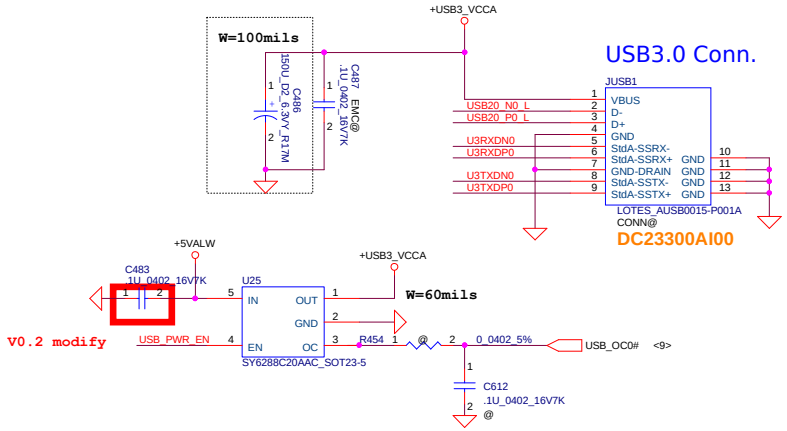

USB3.0 Port 1

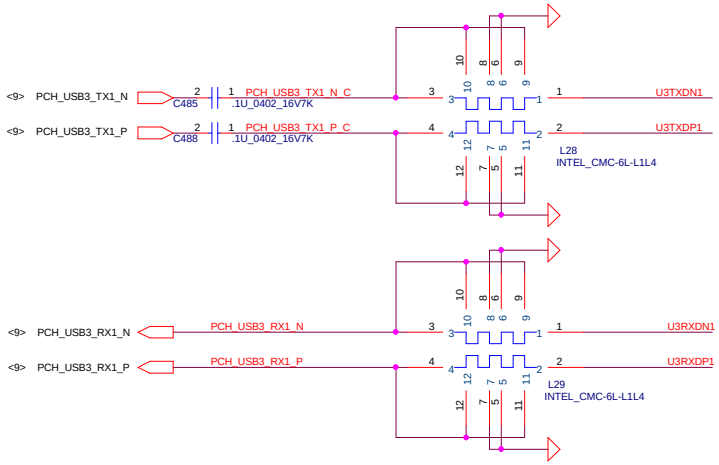

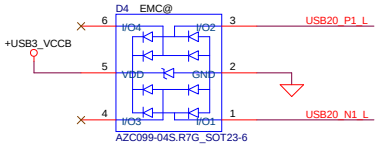

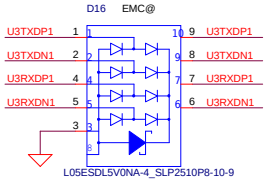

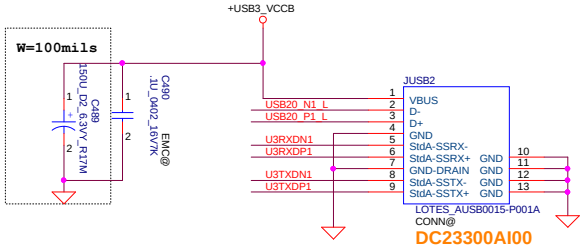

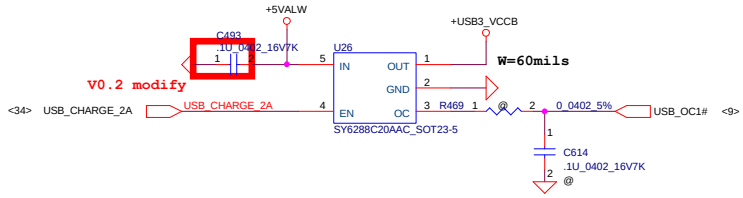

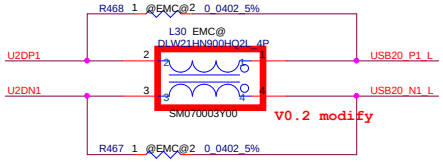

USB/B Conn.
(USB2 x1 + audio jack)

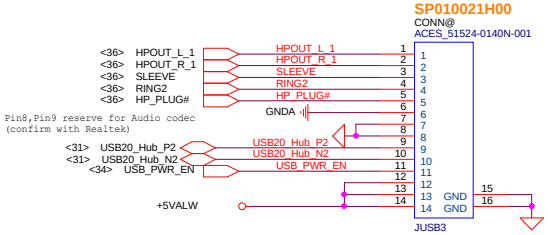

USB Host Charger

CB	SELCDP	
0	X	DCP(Dedicated Charging Port) autodetect with mouse/keyboard wakeup
1	0	S0 charging with SDP(Standard Downstream Port) only
1	1	S0 charging with CDP(Charging Downstream Port) or SDP only

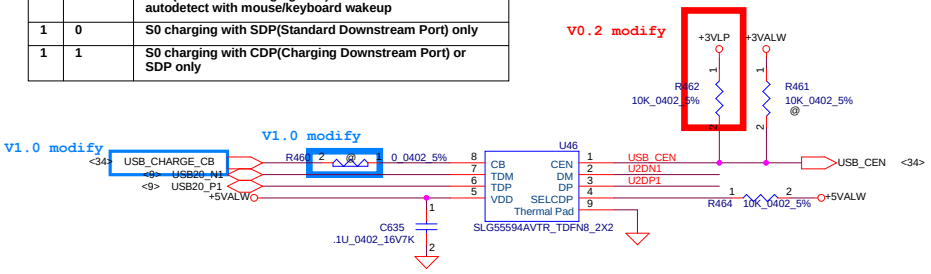

Security Classification	Compal Secret Data		
Issued Date	2014/08/28	Deciphered Date	2016/08/28

THIS SHEET OF ENGINEERING DRAWING IS THE PROPRIETARY PROPERTY OF COMPAL ELECTRONICS, INC. AND CONTAINS CONFIDENTIAL AND TRADE SECRET INFORMATION. THIS SHEET MAY NOT BE TRANSFERED FROM THE CUSTODY OF THE COMPETENT DIVISION OF R&D DEPARTMENT EXCEPT AS AUTHORIZED BY COMPAL ELECTRONICS, INC. NEITHER THIS SHEET NOR THE INFORMATION IT CONTAINS MAY BE USED BY OR DISCLOSED TO ANY THIRD PARTY WITHOUT PRIOR WRITTEN CONSENT OF COMPAL ELECTRONICS, INC.

Compal Electronics, Inc.

Title: USB Conn

Size: Custom | Document Number: A4WAL_Braswell-M/D_LA-C371P | Rev: 1.0

Date: Wednesday, March 04, 2015 | Sheet 33 of 55

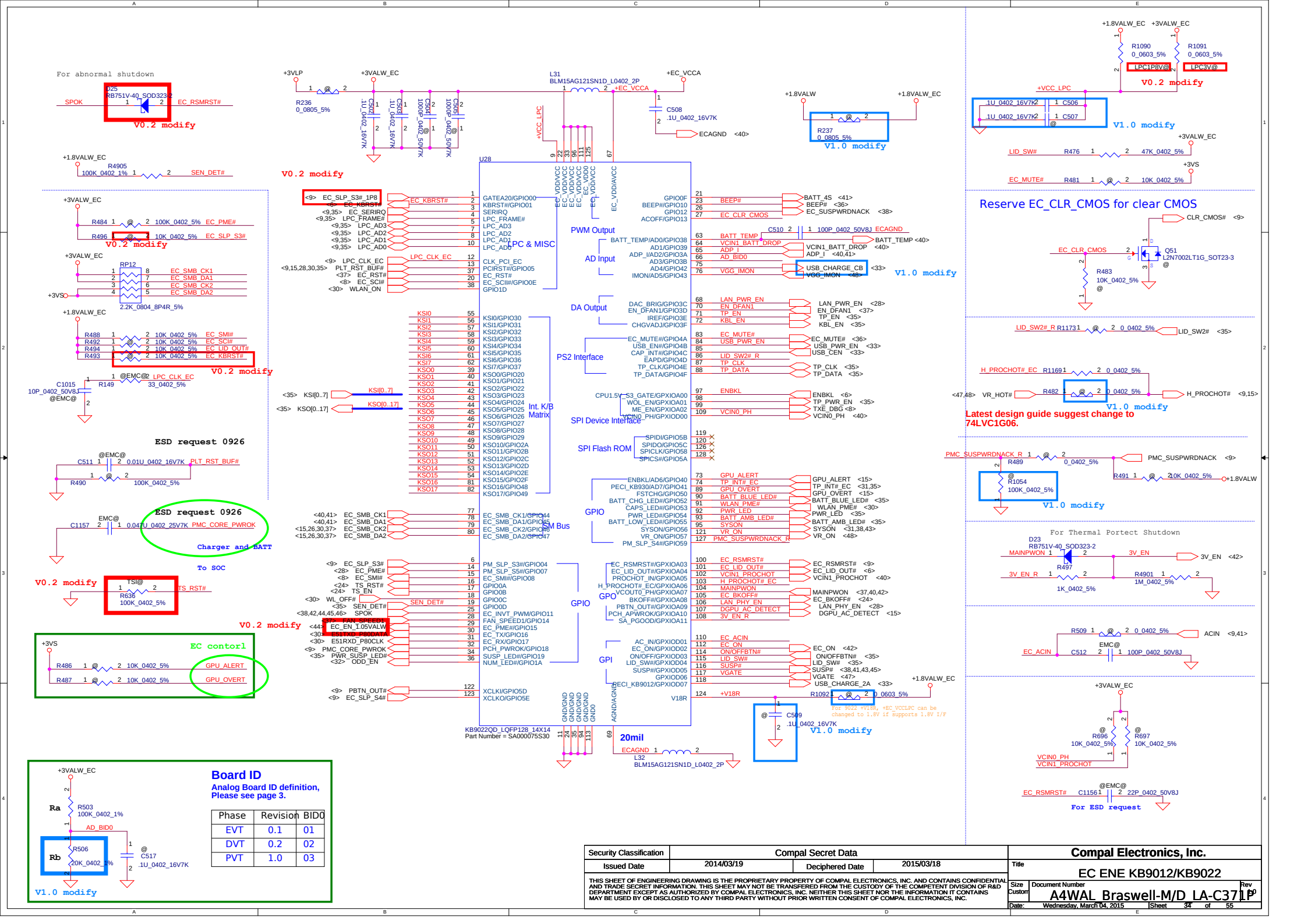
For abnormal shutdown
D25
RB751V-40_SOD323-2
SPOK
EC_RSMRST#
V0.2 modify
+1.8VALW_EC
R4905
100K_0402_1%
SEN_DET#
+3VALW_EC
R484
100K_0402_5%
EC_PME#
R496
10K_0402_5%
EC_SLP_S3#
V0.2 modify
RP12
EC_SMB_CK1
EC_SMB_DA1
EC_SMB_CK2
EC_SMB_DA2
2.2K_0804_8P4R_5%
+3VS
R488
10K_0402_5%
EC_SMI#
R492
EC_SCI#
R494
EC_LID_OUT#
R493
EC_KBRST#
V0.2 modify
C1015
10P_0402_50V8J
@EMC@
R149
33_0402_5%
LPC_CLK_EC
ESD request 0926
C511
0.01U_0402_16V7K
PLT_RST_BUF#
R490
100K_0402_5%
C1157
0.047U_0402_25V7K
PMC_CORE_PWROK
Charger and BATT
To SOC
V0.2 modify
R636
100K_0402_5%
TS_RST#
EC contorl
R486
10K_0402_5%
GPU_ALERT
R487
10K_0402_5%
GPU_OVERT
+3VLP
+3VALW_EC
R236
0_0805_5%
C502
1U_0402_16V7K
C503
1U_0402_16V7K
C504
1000P_0402_50V7K
C505
1000P_0402_50V7K
V0.2 modify
L31
BLM15AG121SN1D_L0402_2P
+EC_VCCA
C508
1U_0402_16V7K
ECAGND
+VCC_LPC
U28
KB9022QD_LQFP128_14X14
Part Number = SA000075S30
LPC & MISC
PWM Output
AD Input
DA Output
PS2 Interface
Int. K/B Matrix
SPI Device Interface
SPI Flash ROM
GPIO
SM Bus
GPO
GPI
20mil
ECAGND
L32
BLM15AG121SN1D_L0402_2P
+1.8VALW
R237
0_0805_5%
V1.0 modify
BATT_4S
BEEP#
EC_SUSPWRDNACK
EC_CLR_CMOS
BATT_TEMP
C510
100P_0402_50V8J
ECAGND
VCIN1_BATT_DROP
ADP_I
AD_BID0
USB_CHARGE_CB
VGG_IMON
V1.0 modify
LAN_PWR_EN
EN_DFAN1
TP_EN
KBL_EN
EC_MUTE#
USB_PWR_EN
USB_CEN
LID_SW2#_R
TP_CLK
TP_DATA
ENBKL
TP_PWR_EN
TXE_DBG
VCIN0_PH
GPU_ALERT
TP_INT#_EC
GPU_OVERT
BATT_BLUE_LED#
WLAN_PME#
PWR_LED
BATT_AMB_LED#
SYSON
VR_ON
PMC_SUSPWRDNACK_R
EC_RSMRST#
EC_LID_OUT#
VCIN1_PROCHOT
H_PROCHOT# EC
MAINPWON
EC_BKOFF#
LAN_PHY_EN
DGPU_AC_DETECT
3V_EN_R
EC_ACIN
EC_ON
ON/OFFBTN#
LID_SW#
SUSP#
VGATE
USB_CHARGE_2A
+V18R
R1092
0_0603_5%
C509
1U_0402_16V7K
V1.0 modify
+1.8VALW_EC
+3VALW_EC
R1090
0_0603_5%
R1091
0_0603_5%
LPC1P8V@
LPC3V@
V0.2 modify
+VCC_LPC
C506
C507
V1.0 modify
LID_SW#
R476
47K_0402_5%
EC_MUTE#
R481
10K_0402_5%
Reserve EC_CLR_CMOS for clear CMOS
CLR_CMOS#
EC_CLR_CMOS
Q51
L2N7002LT1G_SOT23-3
R483
10K_0402_5%
LID_SW2#_R
R1173
0_0402_5%
LID_SW2#
H_PROCHOT# EC
R1169
0_0402_5%
VR_HOT#
R482
0_0402_5%
H_PROCHOT#
V1.0 modify
Latest design guide suggest change to 74LVC1G06.
PMC_SUSPWRDNACK_R
R489
0_0402_5%
PMC_SUSPWRDNACK
R1054
100K_0402_5%
R491
10K_0402_5%
+1.8VALW
V1.0 modify
For Thermal Portect Shutdown
D23
RB751V-40_SOD323-2
MAINPWON
3V_EN
R497
1K_0402_5%
R4901
1M_0402_5%
R509
0_0402_5%
ACIN
EC_ACIN
C512
100P_0402_50V8J
+3VALW_EC
R696
10K_0402_5%
R697
10K_0402_5%
VCIN0_PH
VCIN1_PROCHOT
EC_RSMRST#
C1156
22P_0402_50V8J
For ESD request
+3VALW_EC
Ra
R503
100K_0402_1%
AD_BID0
Rb
R506
20K_0402_1%
C517
1U_0402_16V7K
V1.0 modify
Board ID
Analog Board ID definition, Please see page 3.
Phase | Revision | BID0
EVT | 0.1 | 01
DVT | 0.2 | 02
PVT | 1.0 | 03
Security Classification | Compal Secret Data
Issued Date | 2014/03/19 | Deciphered Date | 2015/03/18
THIS SHEET OF ENGINEERING DRAWING IS THE PROPRIETARY PROPERTY OF COMPAL ELECTRONICS, INC. AND CONTAINS CONFIDENTIAL AND TRADE SECRET INFORMATION. THIS SHEET MAY NOT BE TRANSFERED FROM THE CUSTODY OF THE COMPETENT DIVISION OF R&D DEPARTMENT EXCEPT AS AUTHORIZED BY COMPAL ELECTRONICS, INC. NEITHER THIS SHEET NOR THE INFORMATION IT CONTAINS MAY BE USED BY OR DISCLOSED TO ANY THIRD PARTY WITHOUT PRIOR WRITTEN CONSENT OF COMPAL ELECTRONICS, INC.
Compal Electronics, Inc.
Title
EC ENE KB9012/KB9022
Size Custom
Document Number
A4WAL Braswell-M/D LA-C371P
Rev 1.0
Date: Wednesday, March 04, 2015
Sheet 34 of 55

Lid Switch 2 (reserve for 15")

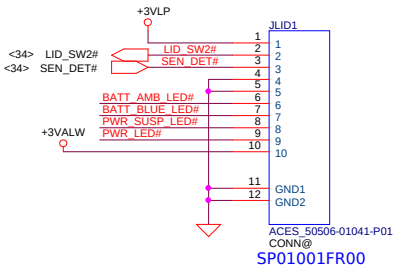

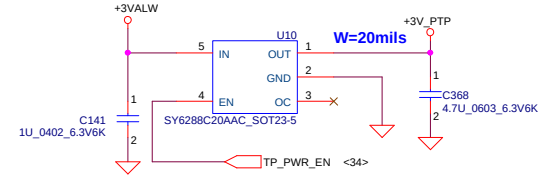

TP module Conn.

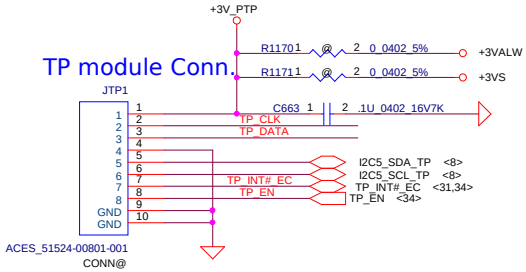

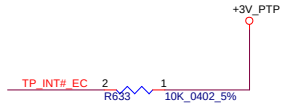

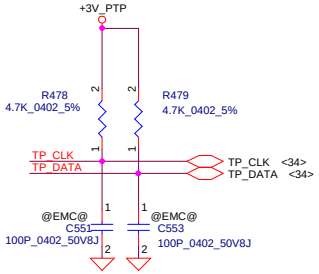

Lid Switch

(Hall Effect Switch)

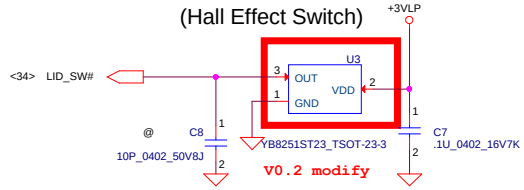

SA00008K800, S IC APX8132AI-TRG SOT-23 3P HALL SENSOR

LED

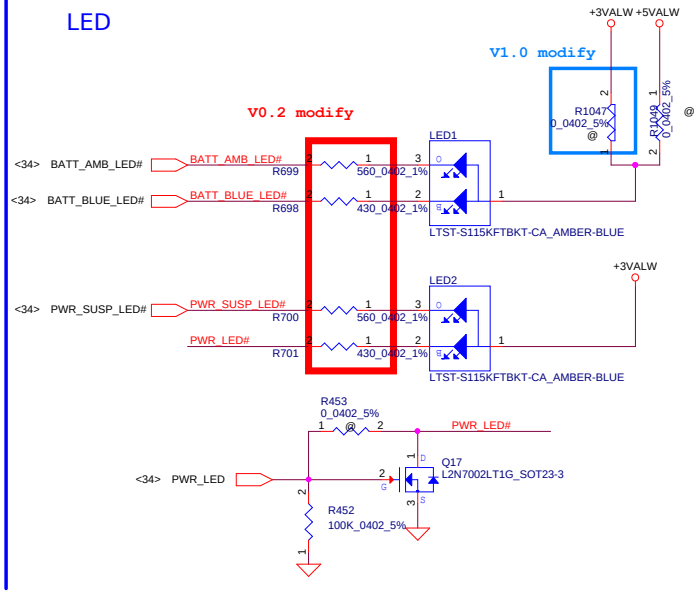

KB Conn.

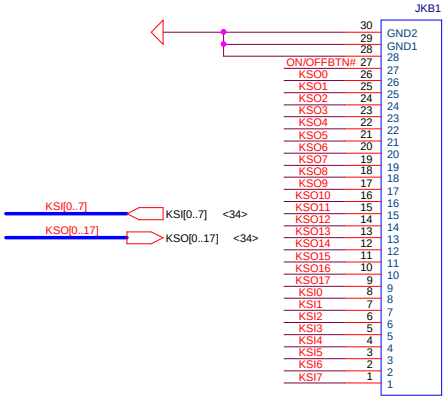

KB BackLight Conn. Reserve

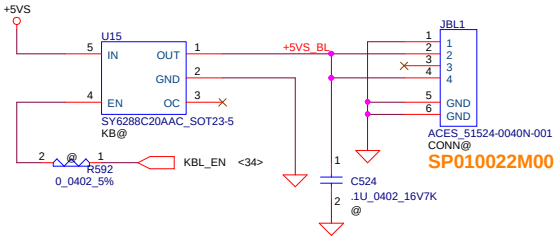

ON/OFF BTN Test only

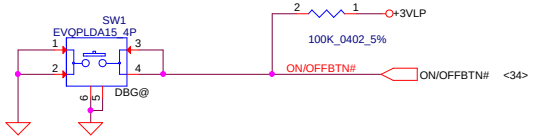

TPM Reserve

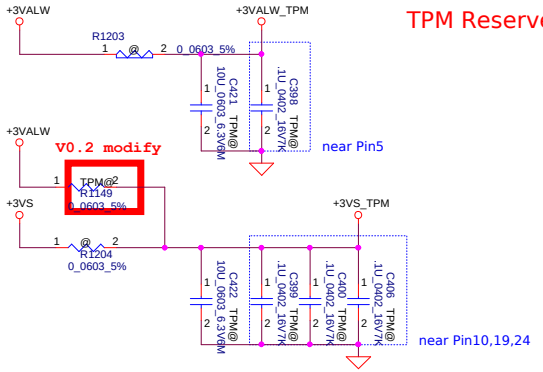

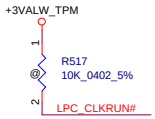

Internal PU

BADD	SELECTION
0	EEh - EFh
* 1	7Eh - 7Fh

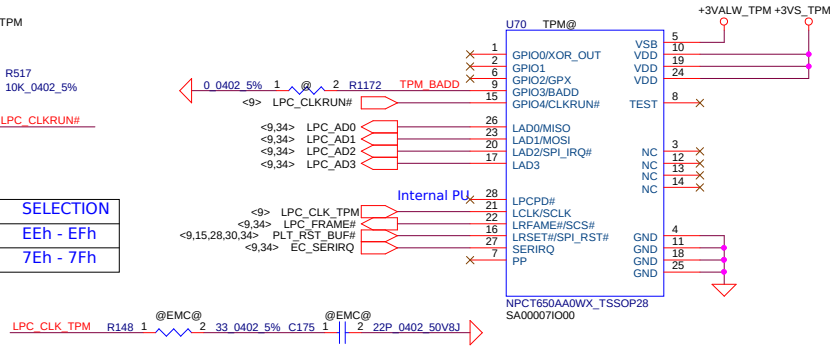

Security Classification	Compal Secret Data		
Issued Date	2014/03/19	Deciphered Date	2015/03/18

THIS SHEET OF ENGINEERING DRAWING IS THE PROPRIETARY PROPERTY OF COMPAL ELECTRONICS, INC. AND CONTAINS CONFIDENTIAL AND TRADE SECRET INFORMATION. THIS SHEET MAY NOT BE TRANSFERED FROM THE CUSTODY OF THE COMPETENT DIVISION OF R&D DEPARTMENT EXCEPT AS AUTHORIZED BY COMPAL ELECTRONICS, INC. NEITHER THIS SHEET NOR THE INFORMATION IT CONTAINS MAY BE USED BY OR DISCLOSED TO ANY THIRD PARTY WITHOUT PRIOR WRITTEN CONSENT OF COMPAL ELECTRONICS, INC.

Compal Electronics, Inc.

Title: KB/TP/LED/TPM/Screw Hole

Size: Custom | Document Number: A4WAL Braswell-M/D LA-C371P | Rev: 1.0

Date: Wednesday, March 04, 2015 | Sheet 35 of 55

HD Audio Codec

SM01000EJ00 3000ma 220ohm@100mhz DCR 0.04

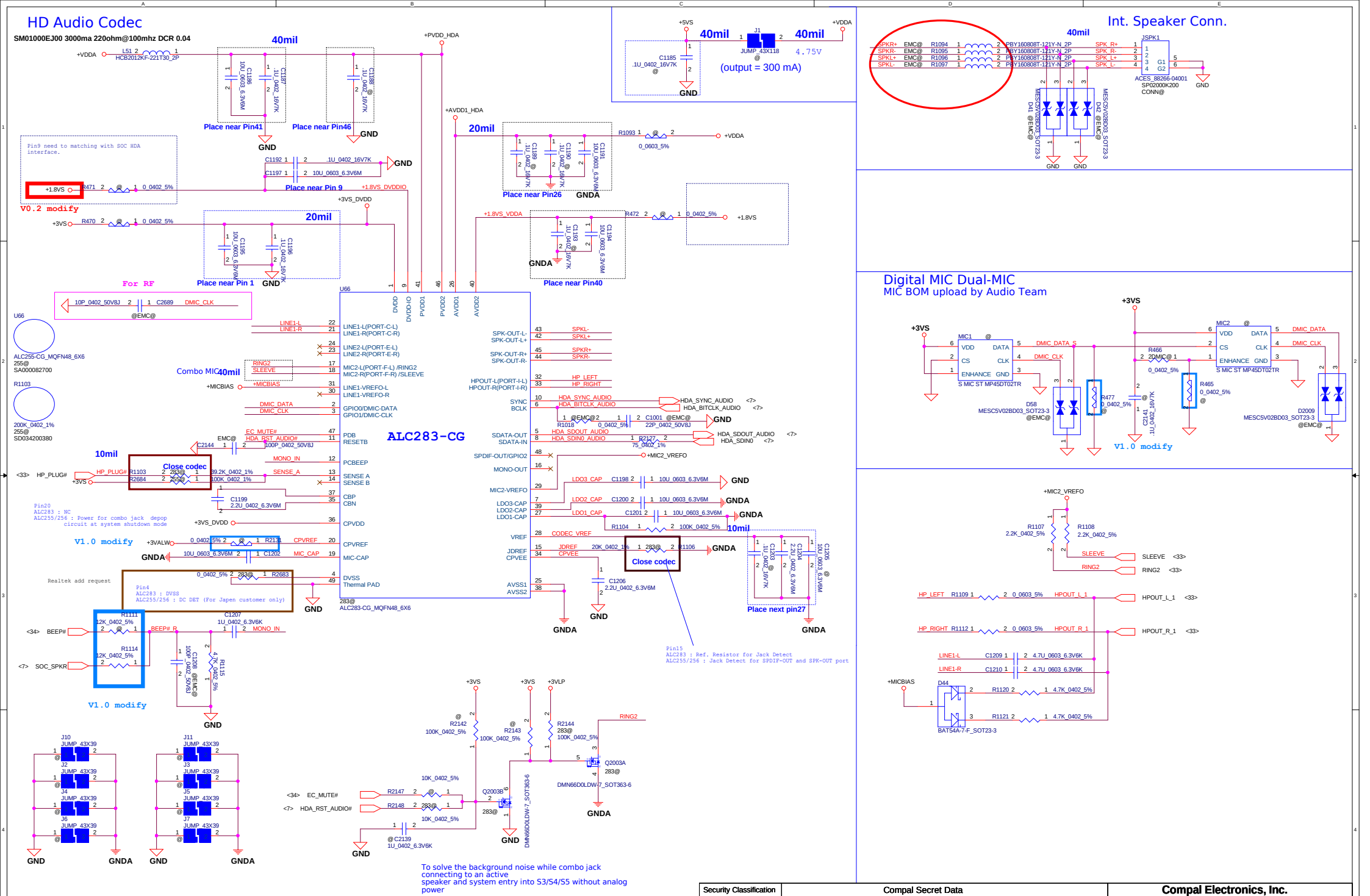

Security Classification	Compal Secret Data		
Issued Date	2014/03/19	Deciphered Date	2015/03/18

THIS SHEET OF ENGINEERING DRAWING IS THE PROPRIETARY PROPERTY OF COMPAL ELECTRONICS, INC. AND CONTAINS CONFIDENTIAL AND TRADE SECRET INFORMATION. THIS SHEET MAY NOT BE TRANSFERED FROM THE CUSTODY OF THE COMPETENT DIVISION OF R&D DEPARTMENT EXCEPT AS AUTHORIZED BY COMPAL ELECTRONICS, INC. NEITHER THIS SHEET NOR THE INFORMATION IT CONTAINS MAY BE USED BY OR DISCLOSED TO ANY THIRD PARTY WITHOUT PRIOR WRITTEN CONSENT OF COMPAL ELECTRONICS, INC.

Compal Electronics, Inc.

Title: HD Audio Codec_ALC283/255 colay

Size: Custom | Document Number: A4WAL_Braswell-M/D_LA-C371P | Rev: 1.0

Date: Wednesday, March 04, 2015 | Sheet 36 of 55

FAN1 Conn

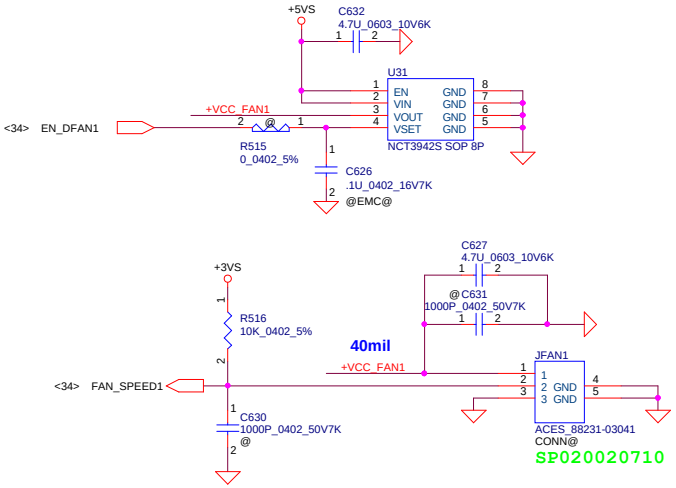

Screw Hole

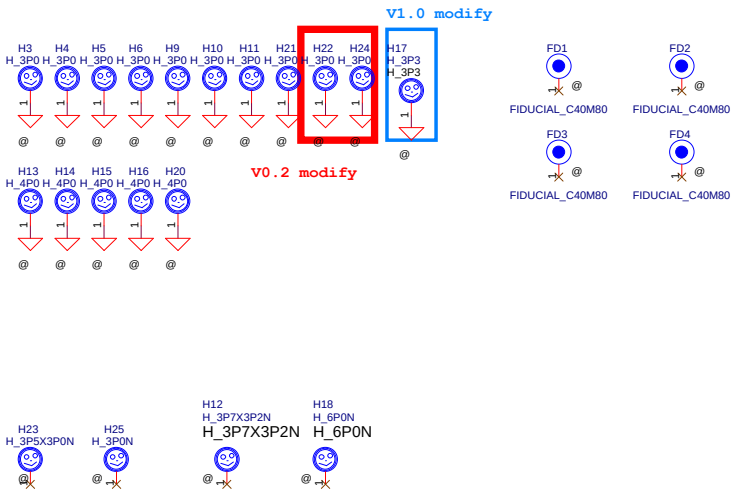

G-Sensor reserved for BA serial

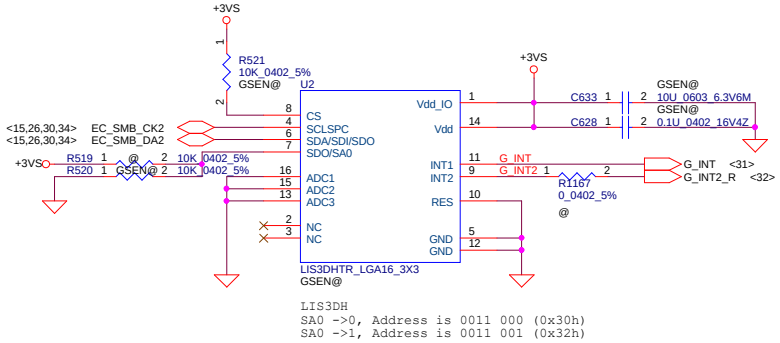

Reset Circuit

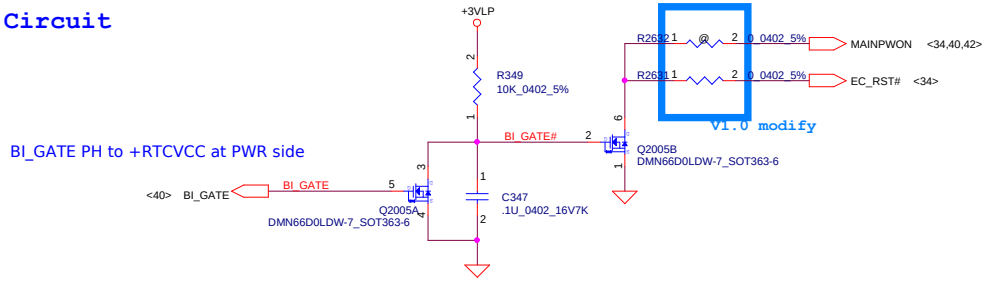

Debug SW

BI SW

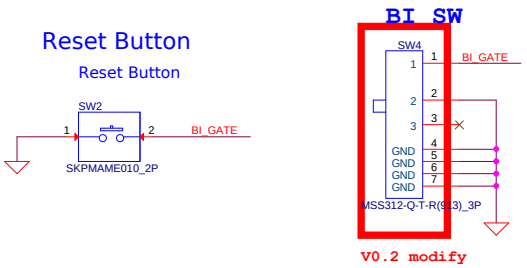

Security Classification	Compal Secret Data		
Issued Date	2014/08/28	Deciphered Date	2016/08/28

THIS SHEET OF ENGINEERING DRAWING IS THE PROPRIETARY PROPERTY OF COMPAL ELECTRONICS, INC. AND CONTAINS CONFIDENTIAL AND TRADE SECRET INFORMATION. THIS SHEET MAY NOT BE TRANSFERED FROM THE CUSTODY OF THE COMPETENT DIVISION OF R&D DEPARTMENT EXCEPT AS AUTHORIZED BY COMPAL ELECTRONICS, INC. NEITHER THIS SHEET NOR THE INFORMATION IT CONTAINS MAY BE USED BY OR DISCLOSED TO ANY THIRD PARTY WITHOUT PRIOR WRITTEN CONSENT OF COMPAL ELECTRONICS, INC.

Compal Electronics, Inc.

Title: **FAN & Screw Hole & Sensor/B**

Size: Custom | Document Number: **A4WAL_Braswell-M/D_LA-C371P** | Rev: 1.0

Date: Wednesday, March 04, 2015 | Sheet 37 of 55

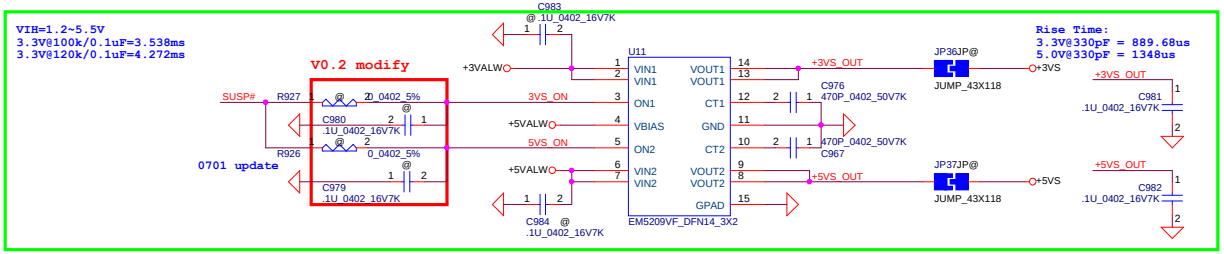

U11,U59,U60 change to SA00007PM00 - EM5209VF

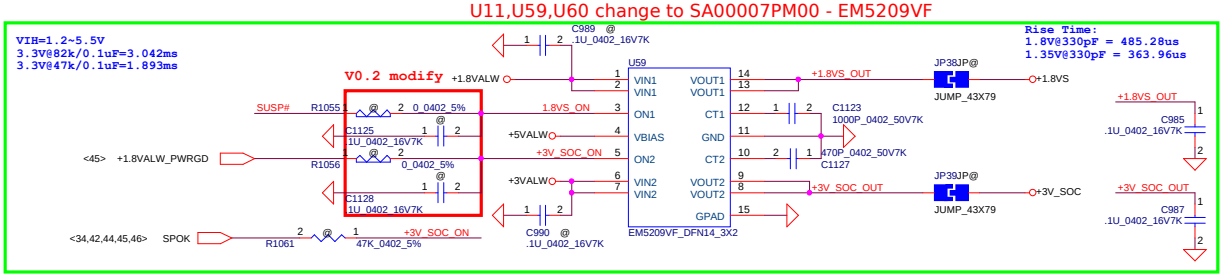

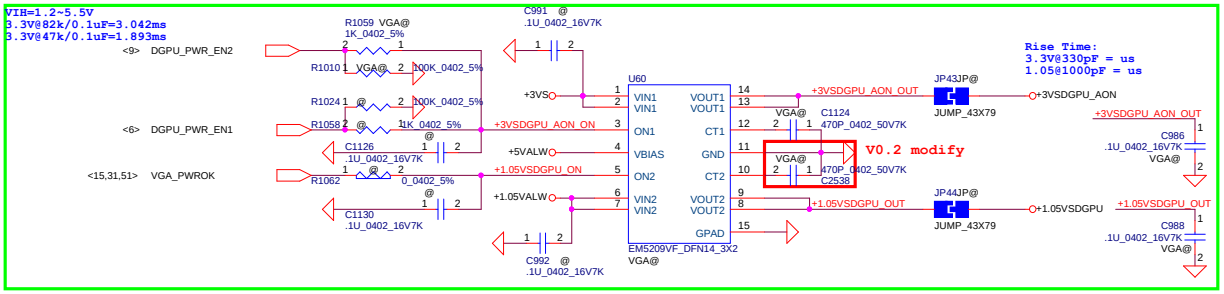

Power-off sequencing schematic

Q2509,Q2510,Q2511
Change to SB00000I200
Vgs = 0.49V~1V

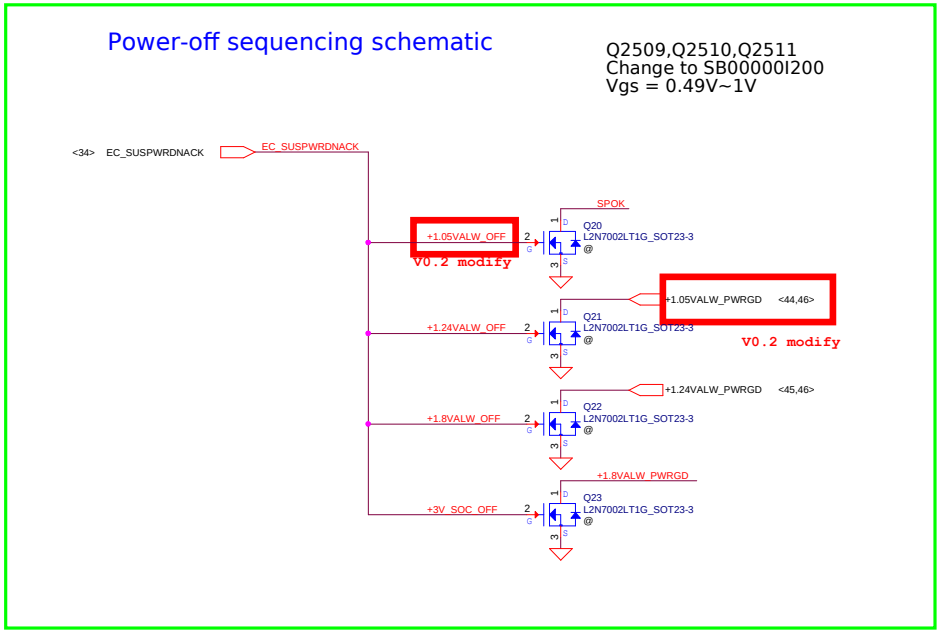

+3VS to +3VSDGPU_MAIN for GC6-2.0

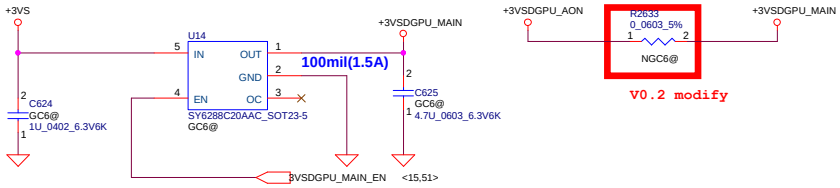

3VSDGPU_MAIN_EN From GPU

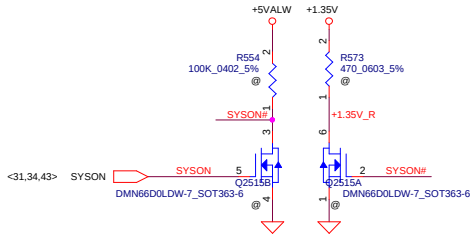

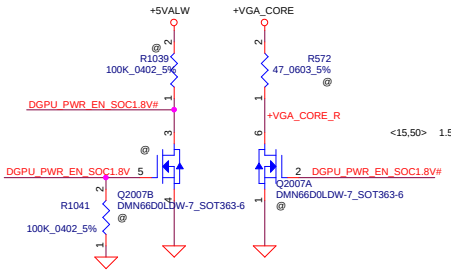

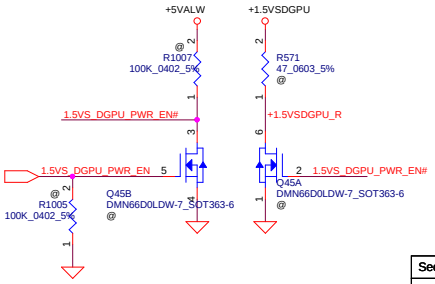

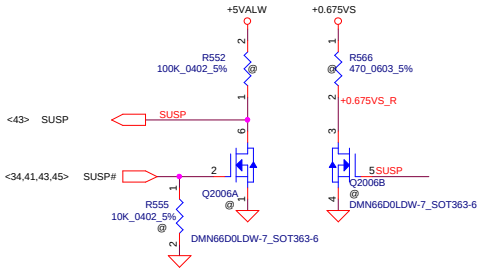

Security Classification	Compal Secret Data		
Issued Date	2014/03/19	Deciphered Date	2015/03/18

THIS SHEET OF ENGINEERING DRAWING IS THE PROPRIETARY PROPERTY OF COMPAL ELECTRONICS, INC. AND CONTAINS CONFIDENTIAL AND TRADE SECRET INFORMATION. THIS SHEET MAY NOT BE TRANSFERRED FROM THE CUSTODY OF THE COMPETENT DIVISION OF R&D DEPARTMENT EXCEPT AS AUTHORIZED BY COMPAL ELECTRONICS, INC. NEITHER THIS SHEET NOR THE INFORMATION IT CONTAINS MAY BE USED BY OR DISCLOSED TO ANY THIRD PARTY WITHOUT PRIOR WRITTEN CONSENT OF COMPAL ELECTRONICS, INC.

Compal Electronics, Inc.

Title: DC INTERFACE

Size: Custom | Document Number: A4WAL_Braswell-M/D_LA-C371P | Rev: 1.0

Date: Wednesday, March 04, 2015 | Sheet 38 of 55

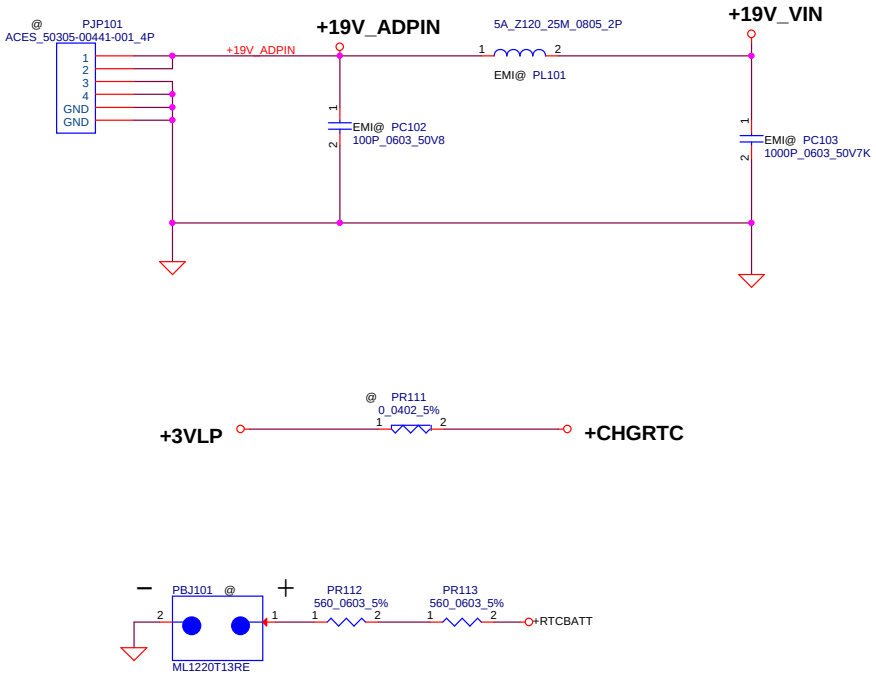

Security Classification	Compal Secret Data			Compal Electronics, Inc.
Issued Date	2014/03/19	Deciphered Date	2015/03/18	Title: DCIN / RTC
				Size: Custom; Document Number: A4WAL_Braswell-M/D_LA-C371P; Rev: 1P
				Date: Wednesday, March 04, 2015; Sheet 39 of 55

THIS SHEET OF ENGINEERING DRAWING IS THE PROPRIETARY PROPERTY OF COMPAL ELECTRONICS, INC. AND CONTAINS CONFIDENTIAL AND TRADE SECRET INFORMATION. THIS SHEET MAY NOT BE TRANSFERED FROM THE CUSTODY OF THE COMPETENT DIVISION OF R&D DEPARTMENT EXCEPT AS AUTHORIZED BY COMPAL ELECTRONICS, INC. NEITHER THIS SHEET NOR THE INFORMATION IT CONTAINS MAY BE USED BY OR DISCLOSED TO ANY THIRD PARTY WITHOUT PRIOR WRITTEN CONSENT OF COMPAL ELECTRONICS, INC.

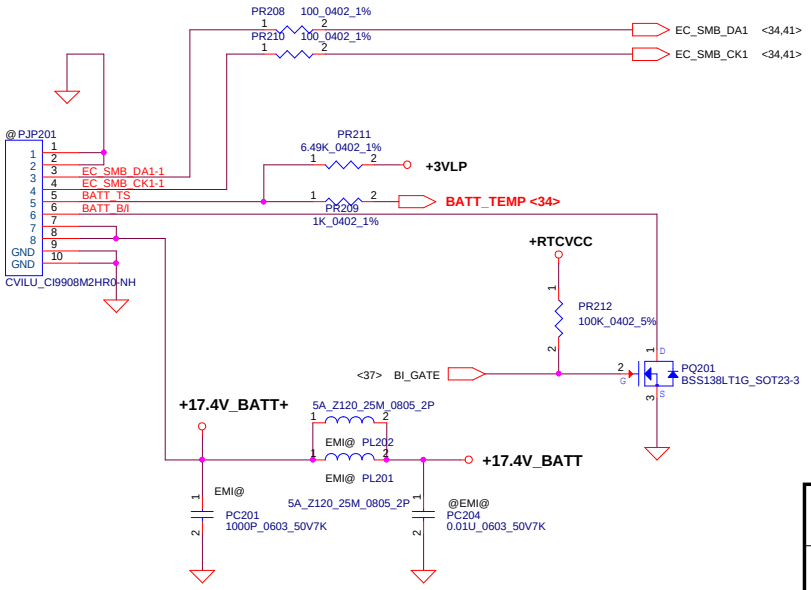

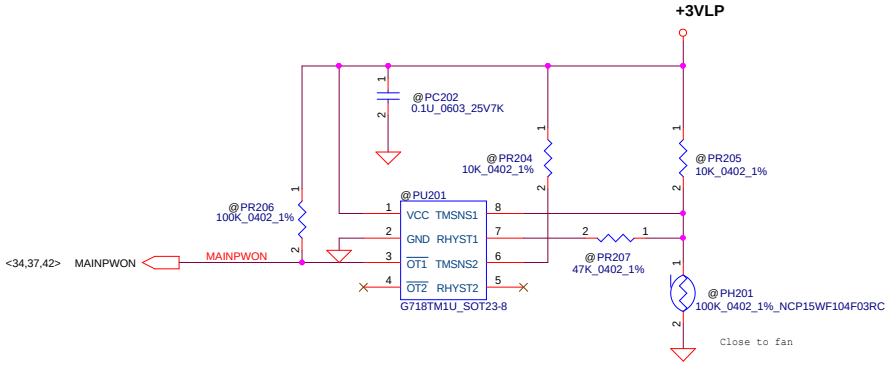

	For KB9022 OTP
92°C	1.0V
56°C	2.0V
PR216	16.9K ohm

Need confirm the setting

For KB9022 sense 20mΩ	Active	Recovery	PR202
65W	69.55W,0.73V	55.9W,0.59V	10KΩ
45W	48.15W,0.73V	38.7W,0.59V	3.83KΩ

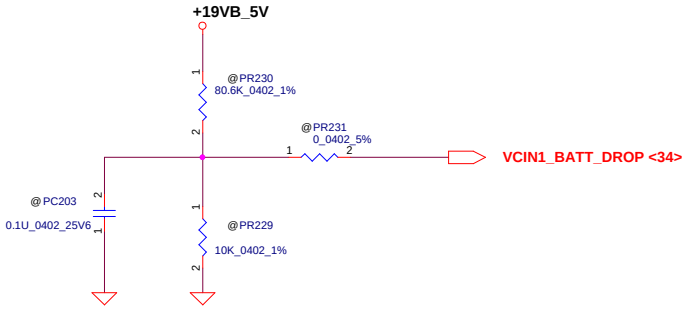

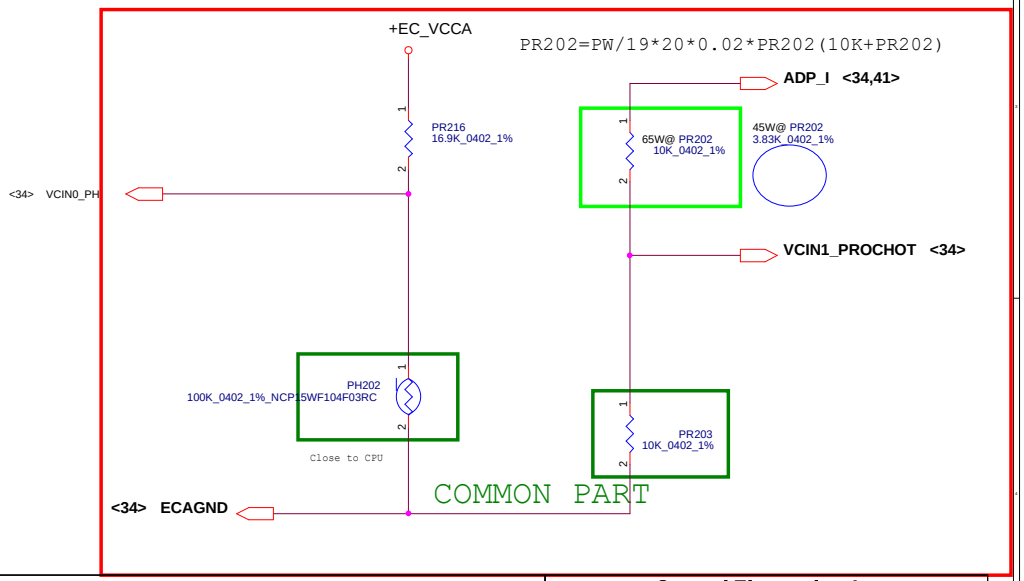

Security Classification	Compal Secret Data		
Issued Date	2014/03/19	Deciphered Date	2015/03/18

THIS SHEET OF ENGINEERING DRAWING IS THE PROPRIETARY PROPERTY OF COMPAL ELECTRONICS, INC. AND CONTAINS CONFIDENTIAL AND TRADE SECRET INFORMATION. THIS SHEET MAY NOT BE TRANSFERED FROM THE CUSTODY OF THE COMPETENT DIVISION OF R&D DEPARTMENT EXCEPT AS AUTHORIZED BY COMPAL ELECTRONICS, INC. NEITHER THIS SHEET NOR THE INFORMATION IT CONTAINS MAY BE USED BY OR DISCLOSED TO ANY THIRD PARTY WITHOUT PRIOR WRITTEN CONSENT OF COMPAL ELECTRONICS, INC.

Compal Electronics, Inc.

Title: BATTERY CONN / OTP

Size: Custom | Document Number: A4WAL_Braswell-M/D_LA-C371P | Rev: 1.0

Date: Wednesday, March 04, 2015 | Sheet 40 of 55

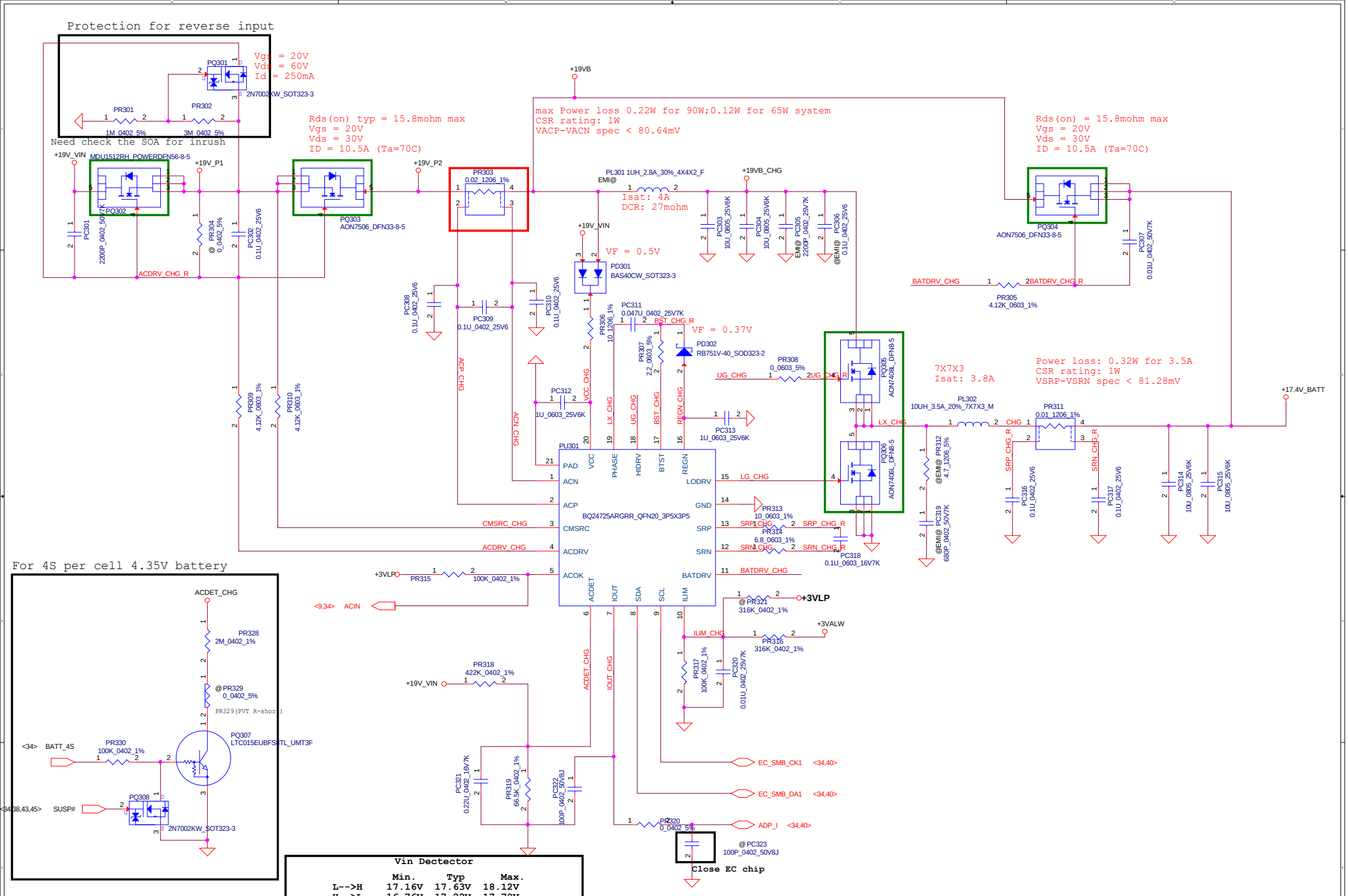

Vin Dectector

	Min.	Typ	Max.
L-->H	17.16V	17.63V	18.12V
H-->L	16.76V	17.22V	17.70V

VILIM = 20*ILIM*Rsr
ILIM = 3.3*100/(100+316)/20/0.01
= 3.966 A

ILIM*0.01*20(IC Current sense amplifier gain)=
VPR311*20=+3VALW*100(PR317)/(100+316)

Security Classification	Compal Secret Data		
Issued Date	2014/03/19	Deciphered Date	2015/03/18

THIS SHEET OF ENGINEERING DRAWING IS THE PROPRIETARY PROPERTY OF COMPAL ELECTRONICS, INC. AND CONTAINS CONFIDENTIAL AND TRADE SECRET INFORMATION. THIS SHEET MAY NOT BE TRANSFERED FROM THE CUSTODY OF THE COMPETENT DIVISION OF R&D DEPARTMENT EXCEPT AS AUTHORIZED BY COMPAL ELECTRONICS, INC. NEITHER THIS SHEET NOR THE INFORMATION IT CONTAINS MAY BE USED BY OR DISCLOSED TO ANY THIRD PARTY WITHOUT PRIOR WRITTEN CONSENT OF COMPAL ELECTRONICS, INC.

Compal Electronics, Inc.

Title: Charger

Size: Custom | Document Number: A4WAL_Braswell-M/D_LA-C371P | Rev: 1.0

Date: Wednesday, March 04, 2015 | Sheet 41 of 55

Module model information

SY8208B_V2.mdd
SY8208C_V2.mdd

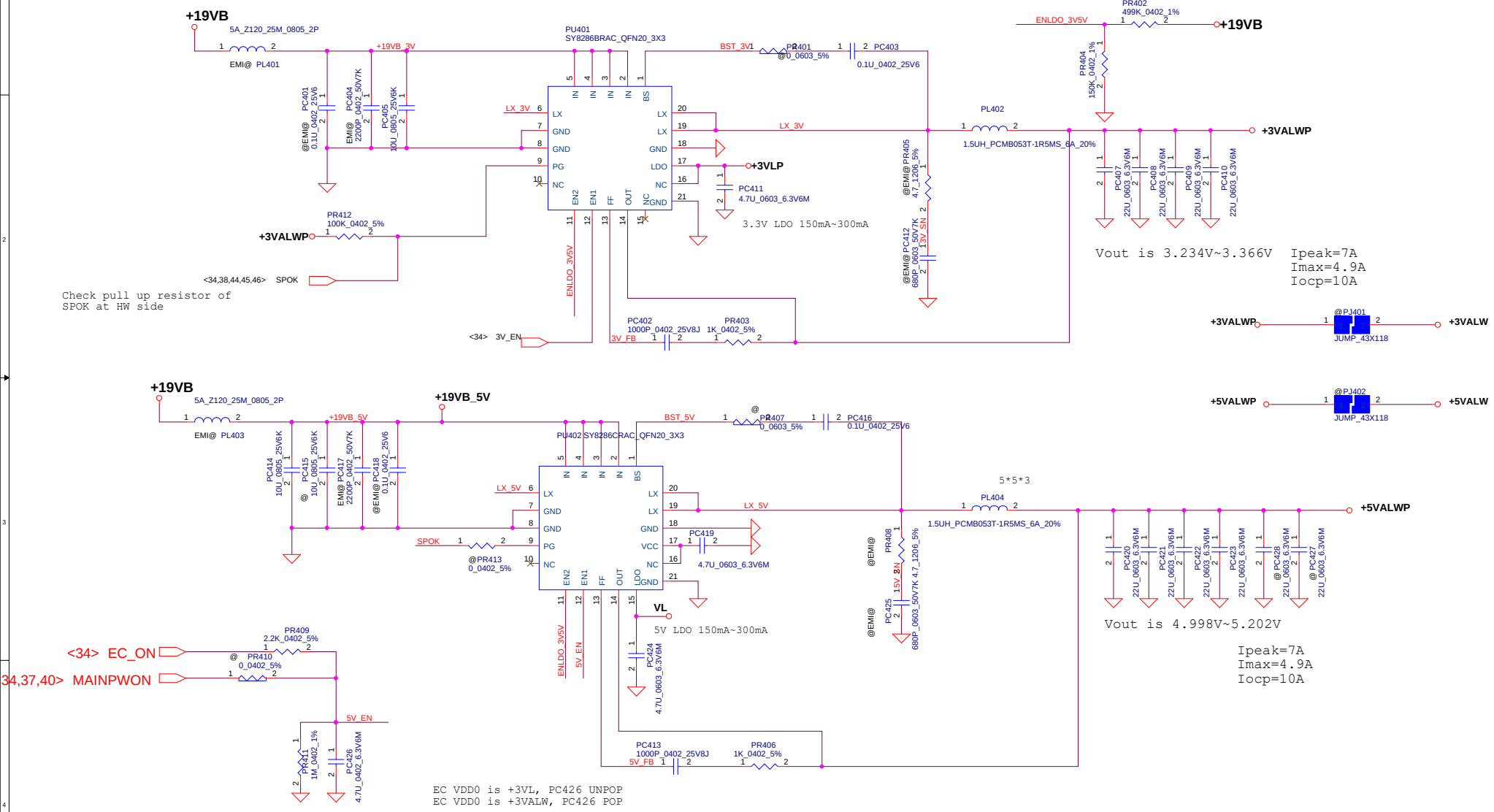

Security Classification	Compal Secret Data		
Issued Date	2014/03/19	Deciphered Date	2015/03/18

THIS SHEET OF ENGINEERING DRAWING IS THE PROPRIETARY PROPERTY OF COMPAL ELECTRONICS, INC. AND CONTAINS CONFIDENTIAL AND TRADE SECRET INFORMATION. THIS SHEET MAY NOT BE TRANSFERRED FROM THE CUSTODY OF THE COMPETENT DIVISION OF R&D DEPARTMENT EXCEPT AS AUTHORIZED BY COMPAL ELECTRONICS, INC. NEITHER THIS SHEET NOR THE INFORMATION IT CONTAINS MAY BE USED BY OR DISCLOSED TO ANY THIRD PARTY WITHOUT PRIOR WRITTEN CONSENT OF COMPAL ELECTRONICS, INC.

Compal Electronics, Inc.

Title: 3VALW/5VALW

Size: Custom | Document Number: A4WAL_Braswell-M/D_LA-C371P | Rev: 1.0

Date: Wednesday, March 04, 2015 | Sheet 42 of 55

Pin19 need pull separate from +1.35VP.
If you have +1.35V and +0.675V sequence question,
you can change from +1.35VP to +1.35VS.

0.675Volt +/- 5%
TDC 0.84A
Peak Current 1.2A

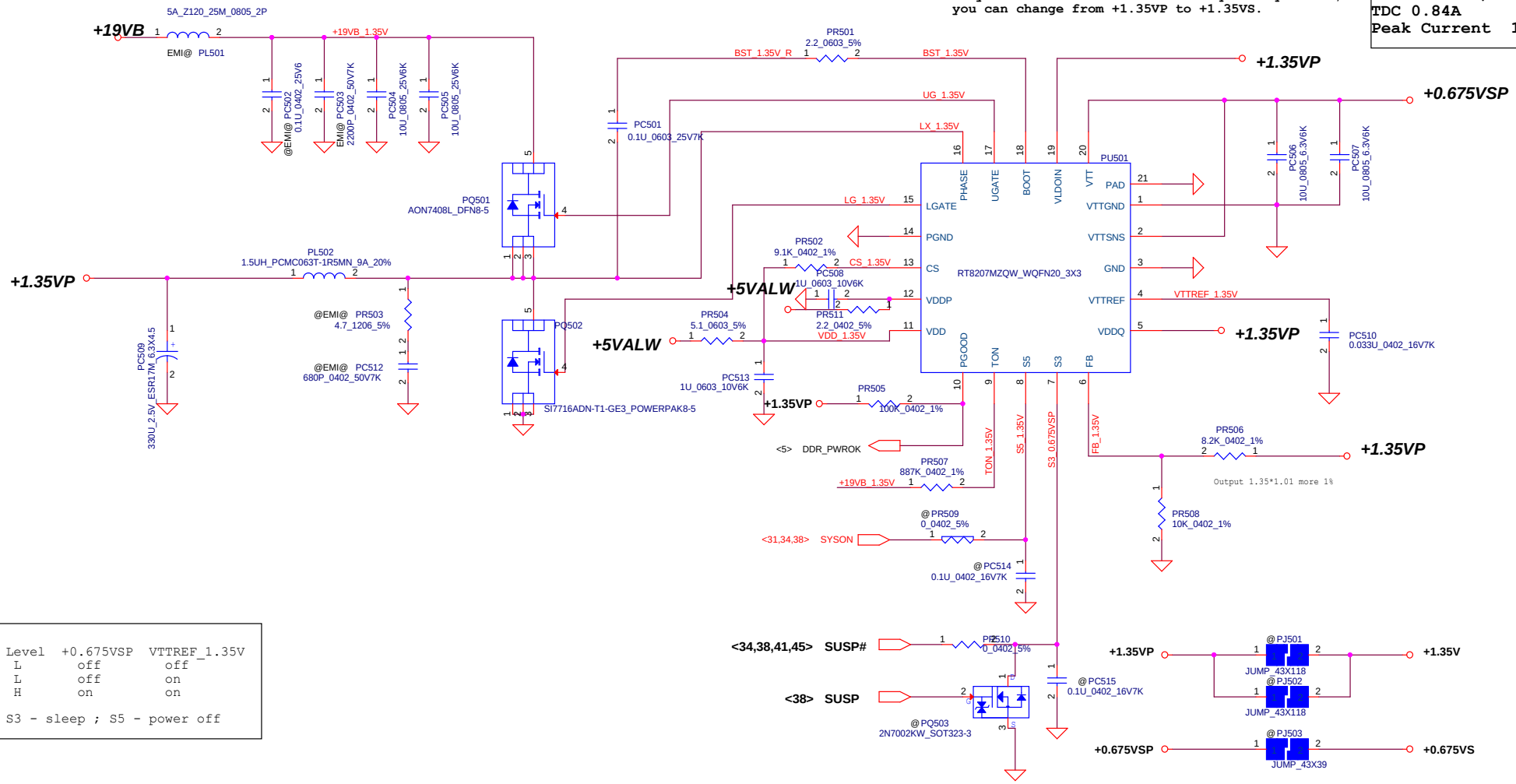

Mode	Level	+0.675VSP	VTTREF_1.35V
S5	L	off	off
S3	L	off	on
S0	H	on	on

Note: S3 - sleep ; S5 - power off

Security Classification	Compal Secret Data		
Issued Date	2014/03/19	Deciphered Date	2015/03/18

THIS SHEET OF ENGINEERING DRAWING IS THE PROPRIETARY PROPERTY OF COMPAL ELECTRONICS, INC. AND CONTAINS CONFIDENTIAL AND TRADE SECRET INFORMATION. THIS SHEET MAY NOT BE TRANSFERED FROM THE CUSTODY OF THE COMPETENT DIVISION OF R&D DEPARTMENT EXCEPT AS AUTHORIZED BY COMPAL ELECTRONICS, INC. NEITHER THIS SHEET NOR THE INFORMATION IT CONTAINS MAY BE USED BY OR DISCLOSED TO ANY THIRD PARTY WITHOUT PRIOR WRITTEN CONSENT OF COMPAL ELECTRONICS, INC.

Compal Electronics, Inc.

Title: 1.35VP/0.675VSP

Size: Custom | Document Number: A4WAL_Braswell-M/D_LA-C371P | Rev: 1.0

Date: Wednesday, March 04, 2015 | Sheet 43 of 55

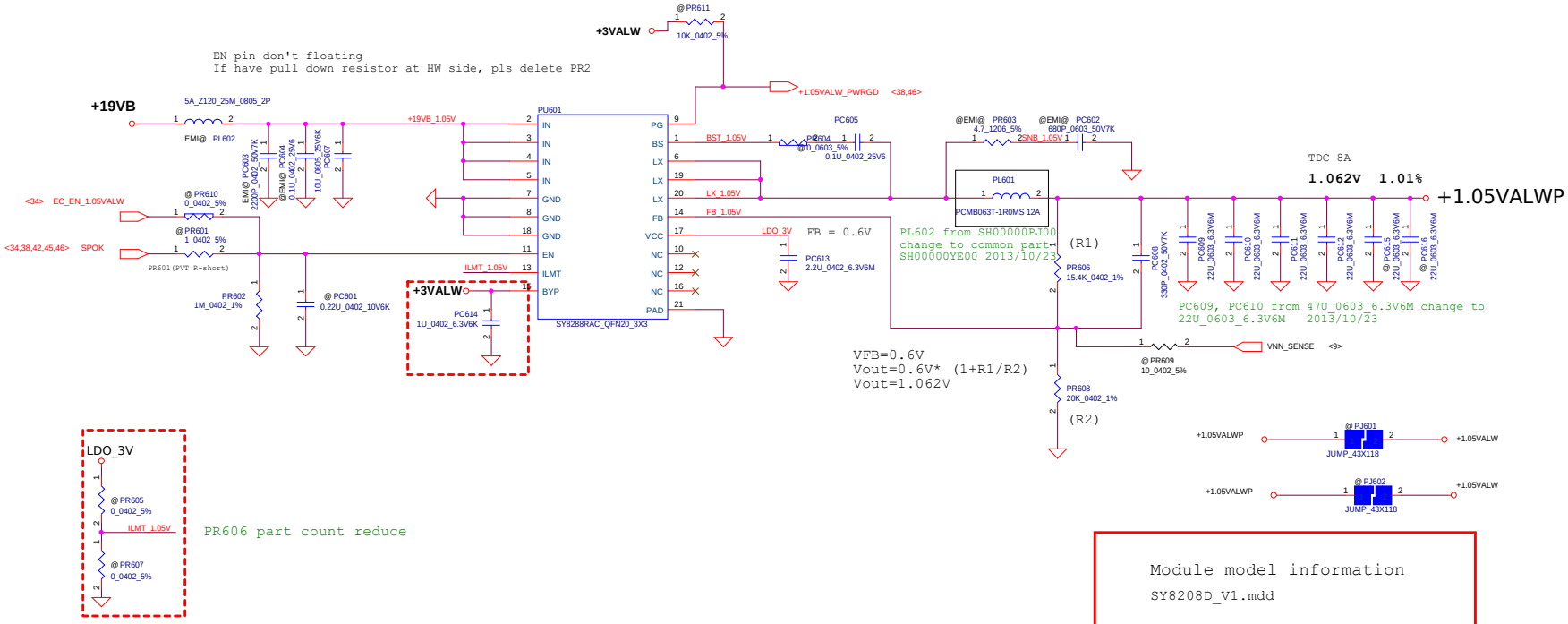

Security Classification	Compal Secret Data			Compal Electronics, Inc.
Issued Date	2013/12/26	Deciphered Date	2014/12/26	Title: *+1.05VALW*
				Size: C; Document Number: A4WAL_Braswell-M/D_LA-C371P; Rev: 1.0
				Date: Wednesday, March 04, 2015; Sheet 44 of 55

THIS SHEET OF ENGINEERING DRAWING IS THE PROPRIETARY PROPERTY OF COMPAL ELECTRONICS, INC. AND CONTAINS CONFIDENTIAL AND TRADE SECRET INFORMATION. THIS SHEET MAY NOT BE TRANSFERED FROM THE CUSTODY OF THE COMPETENT DIVISION OF R&D DEPARTMENT EXCEPT AS AUTHORIZED BY COMPAL ELECTRONICS, INC. NEITHER THIS SHEET NOR THE INFORMATION IT CONTAINS MAY BE USED BY OR DISCLOSED TO ANY THIRD PARTY WITHOUT PRIOR WRITTEN CONSENT OF COMPAL ELECTRONICS, INC.

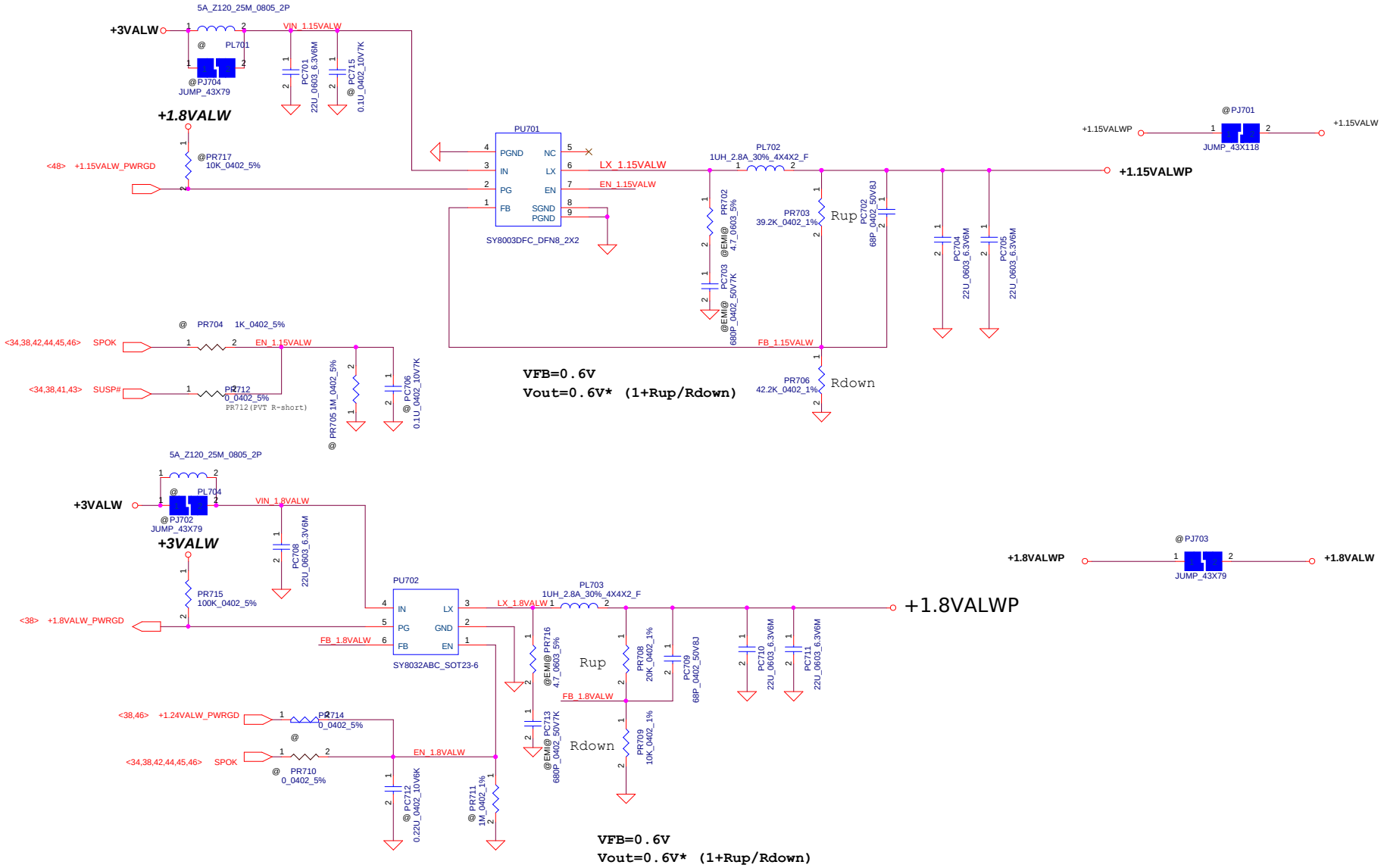

Security Classification	Compal Secret Data		
Issued Date	2014/03/19	Deciphered Date	2015/03/18

THIS SHEET OF ENGINEERING DRAWING IS THE PROPRIETARY PROPERTY OF COMPAL ELECTRONICS, INC. AND CONTAINS CONFIDENTIAL AND TRADE SECRET INFORMATION. THIS SHEET MAY NOT BE TRANSFERED FROM THE CUSTODY OF THE COMPETENT DIVISION OF R&D DEPARTMENT EXCEPT AS AUTHORIZED BY COMPAL ELECTRONICS, INC. NEITHER THIS SHEET NOR THE INFORMATION IT CONTAINS MAY BE USED BY OR DISCLOSED TO ANY THIRD PARTY WITHOUT PRIOR WRITTEN CONSENT OF COMPAL ELECTRONICS, INC.

Compal Electronics, Inc.

Title: +1.15VALW/1.8VALW

Size: Custom | Document Number: A4WAL_Braswell-M/D_LA-C371P | Rev: 1.0

Date: Wednesday, March 04, 2015 | Sheet 45 of 55

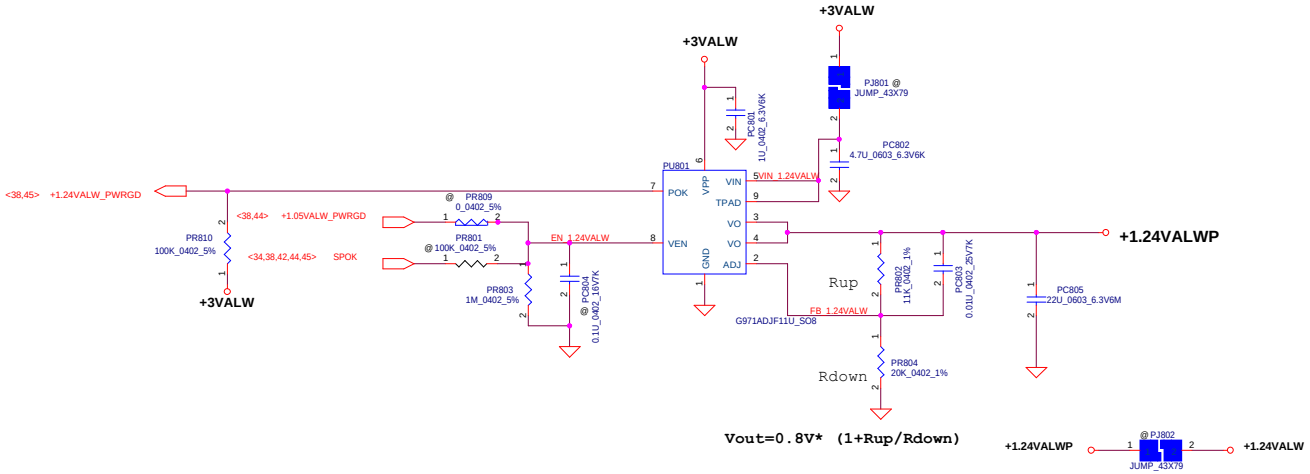

Security Classification	Compal Secret Data			Compal Electronics, Inc.
Issued Date	2014/03/19	Deciphered Date	2015/03/18	Title: 1.24VALW
THIS SHEET OF ENGINEERING DRAWING IS THE PROPRIETARY PROPERTY OF COMPAL ELECTRONICS, INC. AND CONTAINS CONFIDENTIAL AND TRADE SECRET INFORMATION. THIS SHEET MAY NOT BE TRANSFERED FROM THE CUSTODY OF THE COMPETENT DIVISION OF R&D DEPARTMENT EXCEPT AS AUTHORIZED BY COMPAL ELECTRONICS, INC. NEITHER THIS SHEET NOR THE INFORMATION IT CONTAINS MAY BE USED BY OR DISCLOSED TO ANY THIRD PARTY WITHOUT PRIOR WRITTEN CONSENT OF COMPAL ELECTRONICS, INC.				Size: C; Document Number: A4WAL_Braswell-M/D_LA-C371P; Rev: 1.0
				Date: Wednesday, March 04, 2015; Sheet 46 of 55

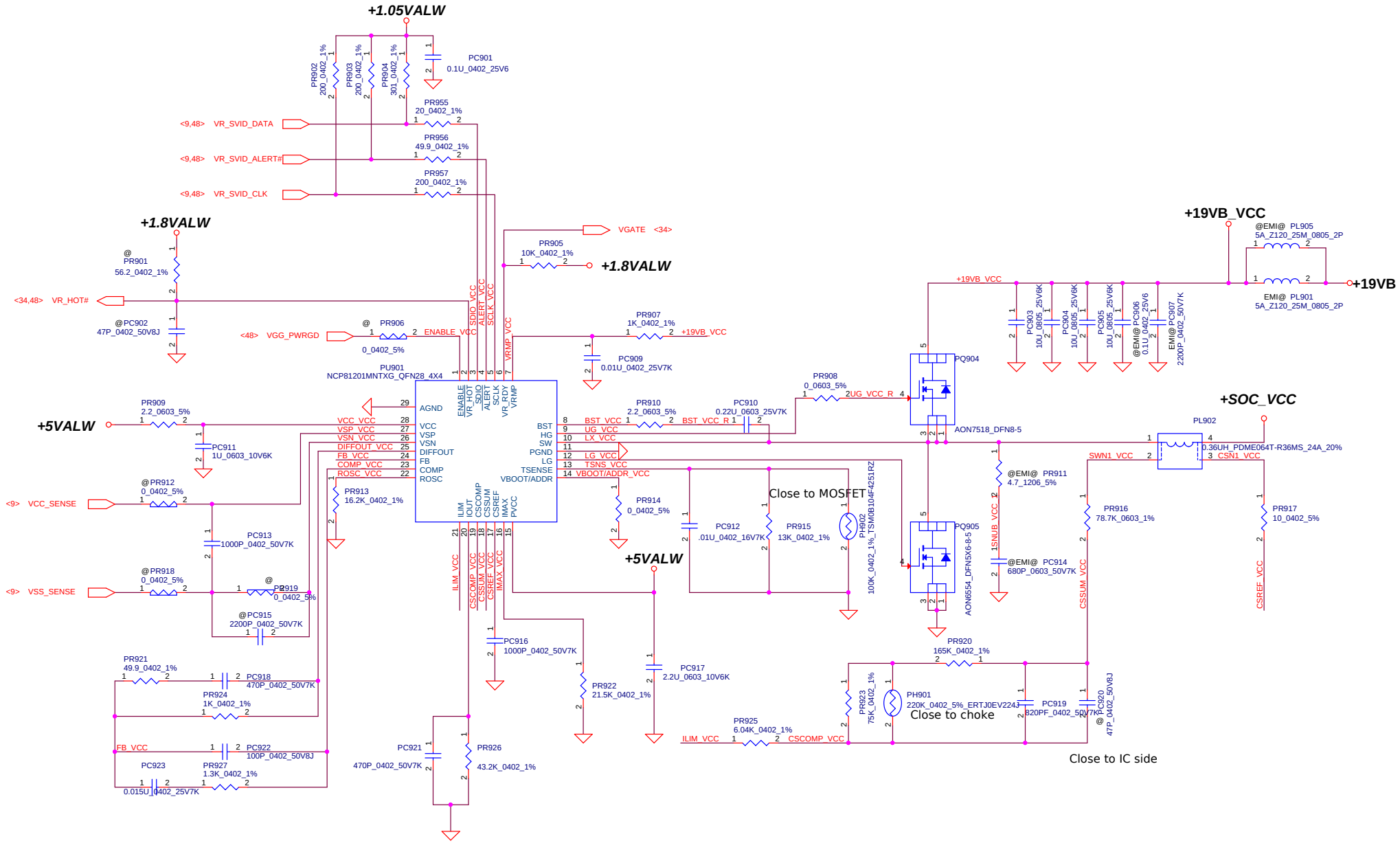

Security Classification	Compal Secret Data			Compal Electronics, Inc.
Issued Date	2012/04/03	Deciphered Date	2014/12/31	Title: +SOC_VCC

THIS SHEET OF ENGINEERING DRAWING IS THE PROPRIETARY PROPERTY OF COMPAL ELECTRONICS, INC. AND CONTAINS CONFIDENTIAL AND TRADE SECRET INFORMATION. THIS SHEET MAY NOT BE TRANSFERED FROM THE CUSTODY OF THE COMPETENT DIVISION OF R&D DEPARTMENT EXCEPT AS AUTHORIZED BY COMPAL ELECTRONICS, INC. NEITHER THIS SHEET NOR THE INFORMATION IT CONTAINS MAY BE USED BY OR DISCLOSED TO ANY THIRD PARTY WITHOUT PRIOR WRITTEN CONSENT OF COMPAL ELECTRONICS, INC.

Size	Document Number	Rev
	A4WAL_Braswell-M/D_LA-C371P	1.0

Date: Wednesday, March 04, 2015 Sheet 47 of 55

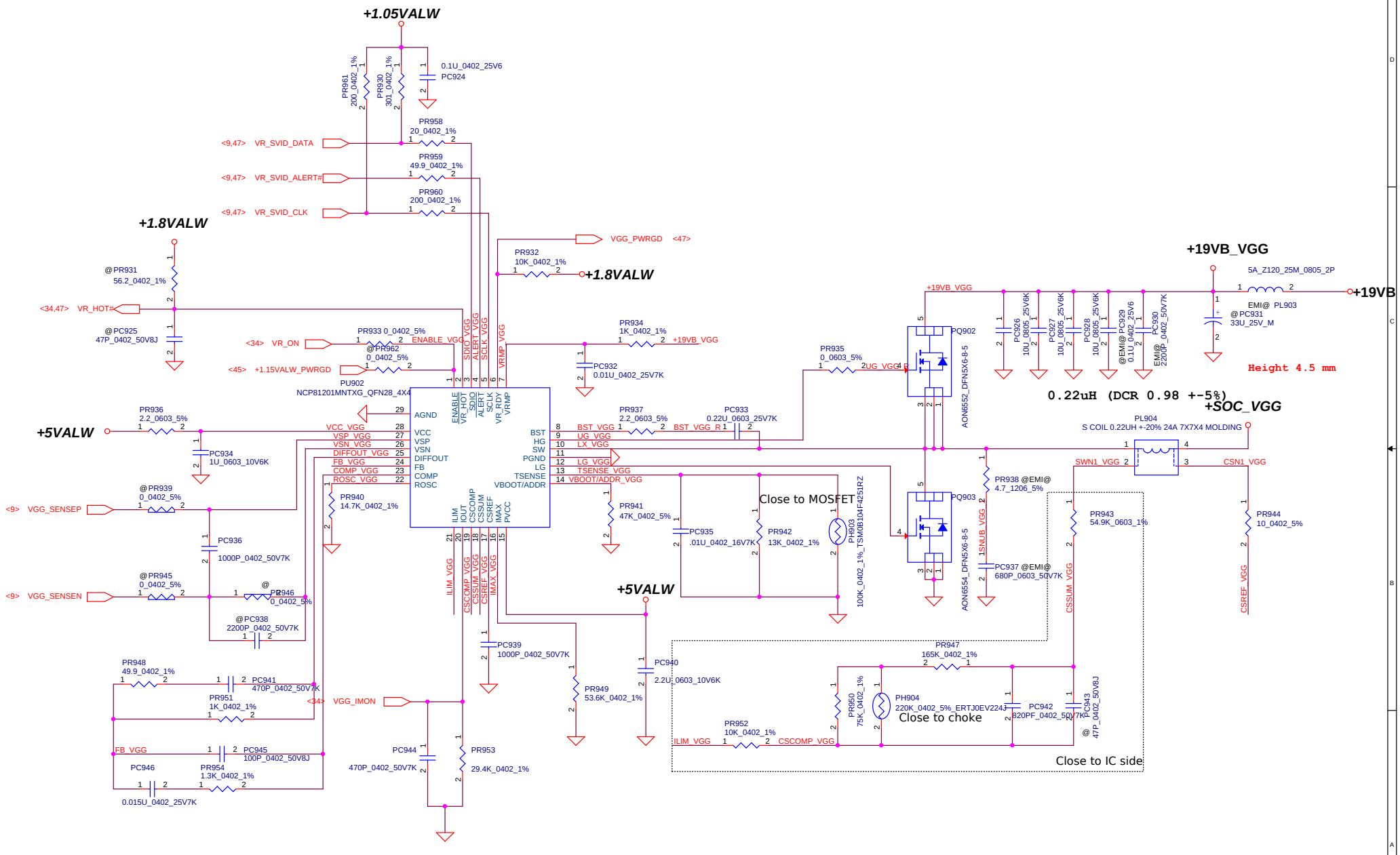

Security Classification	Compal Secret Data			Compal Electronics, Inc.
Issued Date	2012/04/03	Deciphered Date	2014/12/31	Title: +SOC_VGG
				Size: Document Number: A4WAL_Braswell-M/D_LA-C371P Rev: 1.0
				Date: Wednesday, March 04, 2015 Sheet 48 of 55

THIS SHEET OF ENGINEERING DRAWING IS THE PROPRIETARY PROPERTY OF COMPAL ELECTRONICS, INC. AND CONTAINS CONFIDENTIAL AND TRADE SECRET INFORMATION. THIS SHEET MAY NOT BE TRANSFERED FROM THE CUSTODY OF THE COMPETENT DIVISION OF R&D DEPARTMENT EXCEPT AS AUTHORIZED BY COMPAL ELECTRONICS, INC. NEITHER THIS SHEET NOR THE INFORMATION IT CONTAINS MAY BE USED BY OR DISCLOSED TO ANY THIRD PARTY WITHOUT PRIOR WRITTEN CONSENT OF COMPAL ELECTRONICS, INC.

4.7U_0402 *5 +22U_0603 * 16 + 4 reserved

22U_0603 * 24 + 5 reserved

1U_0402 * 5+ 22U_0603*6 reserved

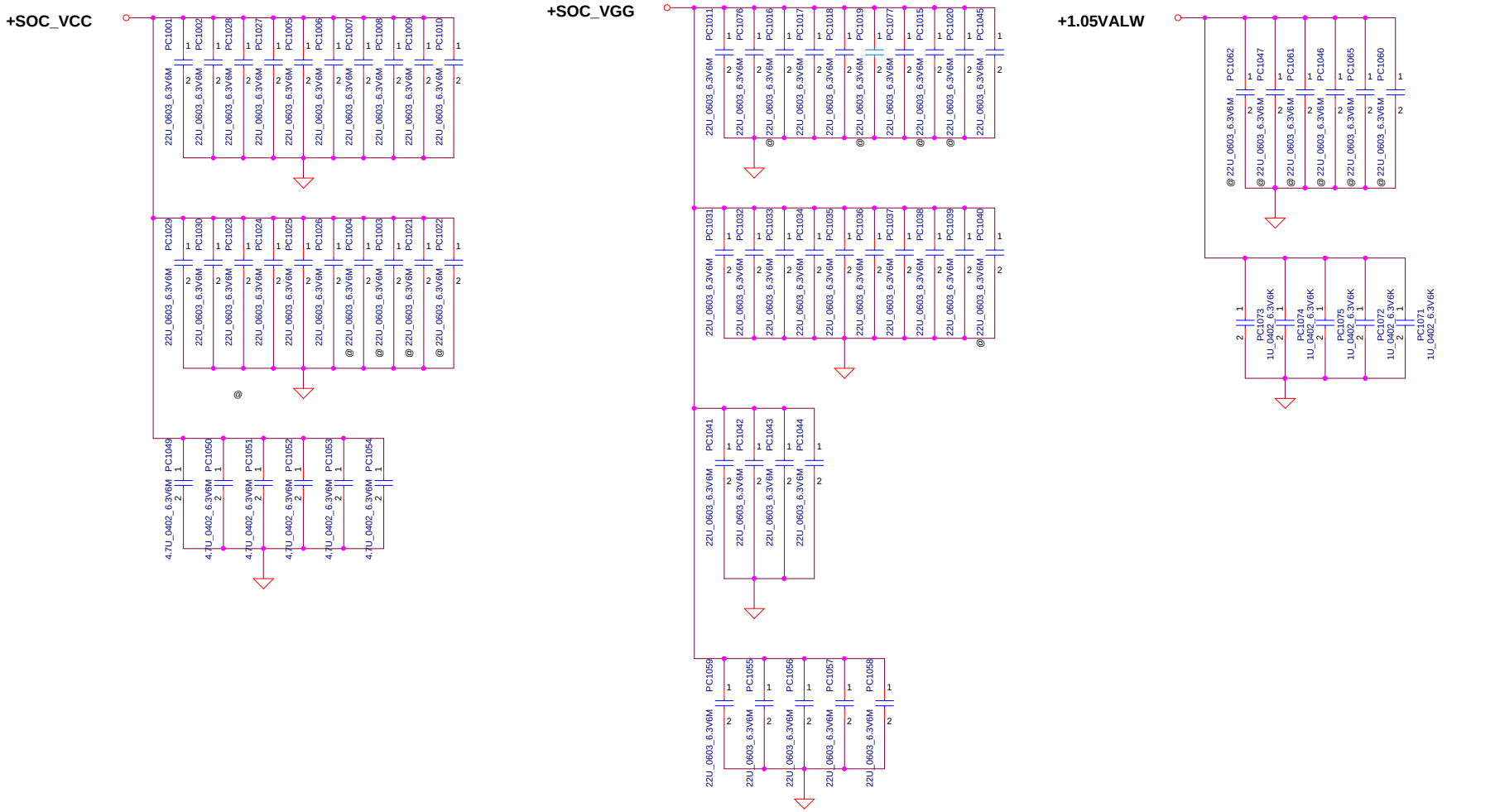

Security Classification	Compal Secret Data		
Issued Date	2011/07/08	Deciphered Date	2015/07/08

THIS SHEET OF ENGINEERING DRAWING IS THE PROPRIETARY PROPERTY OF COMPAL ELECTRONICS, INC. AND CONTAINS CONFIDENTIAL AND TRADE SECRET INFORMATION. THIS SHEET MAY NOT BE TRANSFERED FROM THE CUSTODY OF THE COMPETENT DIVISION OF R&D DEPARTMENT EXCEPT AS AUTHORIZED BY COMPAL ELECTRONICS, INC. NEITHER THIS SHEET NOR THE INFORMATION IT CONTAINS MAY BE USED BY OR DISCLOSED TO ANY THIRD PARTY WITHOUT PRIOR WRITTEN CONSENT OF COMPAL ELECTRONICS, INC.

Compal Electronics, Inc.

Title: PROCESSOR DECOUPLING

Size: Custom | Document Number: A4WAL_Braswell-M/D_LA-C371P | Rev: 1.0

Date: Wednesday, March 04, 2015 | Sheet 49 of 55

EN pin don't floating
If have pull down resistor at HW side, pls delete PR2

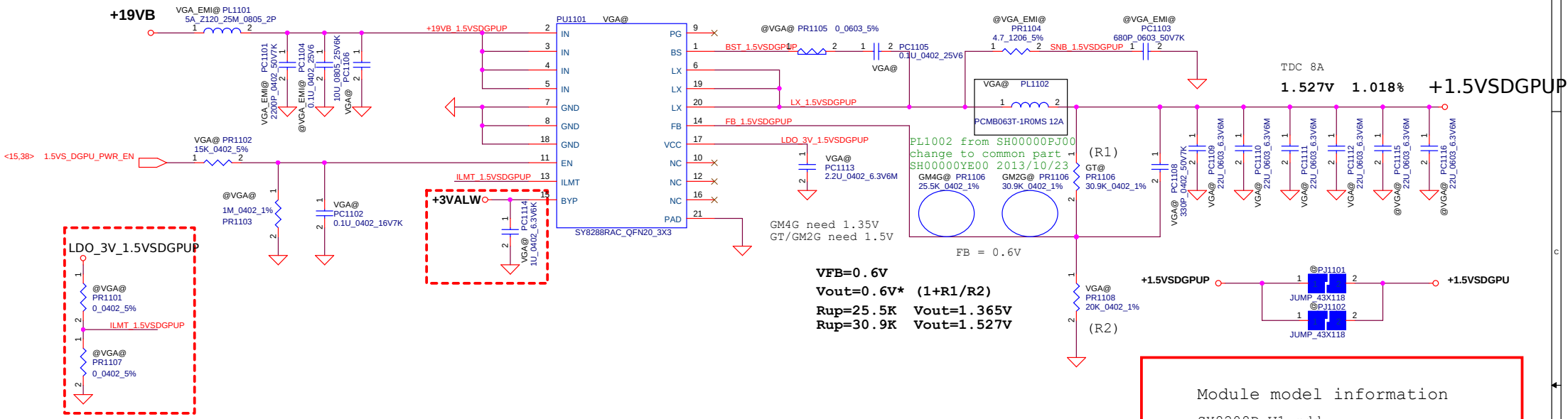

The current limit is set to 8A, 12A or 16A when this pin is pull low, floating or pull high

Module model information

SY8208D_V1.mdd

Security Classification	Compal Secret Data			Compal Electronics, Inc.
Issued Date	2014/03/19	Deciphered Date	2015/03/18	Title: 1.5VSDGPUP
				Size: Custom; Document Number: A4WAL_Braswell-M/D_LA-C371P; Rev: 1.0
				Date: Wednesday, March 04, 2015; Sheet 50 of 55

THIS SHEET OF ENGINEERING DRAWING IS THE PROPRIETARY PROPERTY OF COMPAL ELECTRONICS, INC. AND CONTAINS CONFIDENTIAL AND TRADE SECRET INFORMATION. THIS SHEET MAY NOT BE TRANSFERED FROM THE CUSTODY OF THE COMPETENT DIVISION OF R&D DEPARTMENT EXCEPT AS AUTHORIZED BY COMPAL ELECTRONICS, INC. NEITHER THIS SHEET NOR THE INFORMATION IT CONTAINS MAY BE USED BY OR DISCLOSED TO ANY THIRD PARTY WITHOUT PRIOR WRITTEN CONSENT OF COMPAL ELECTRONICS, INC.

```
PSI :
1 phase with DCM  0V to 0.8V
1 phase with CCM  1.2V to 1.8V
2 phase with CCM  2.4V to 5.5V


EN High Threshold = 1.6V
```

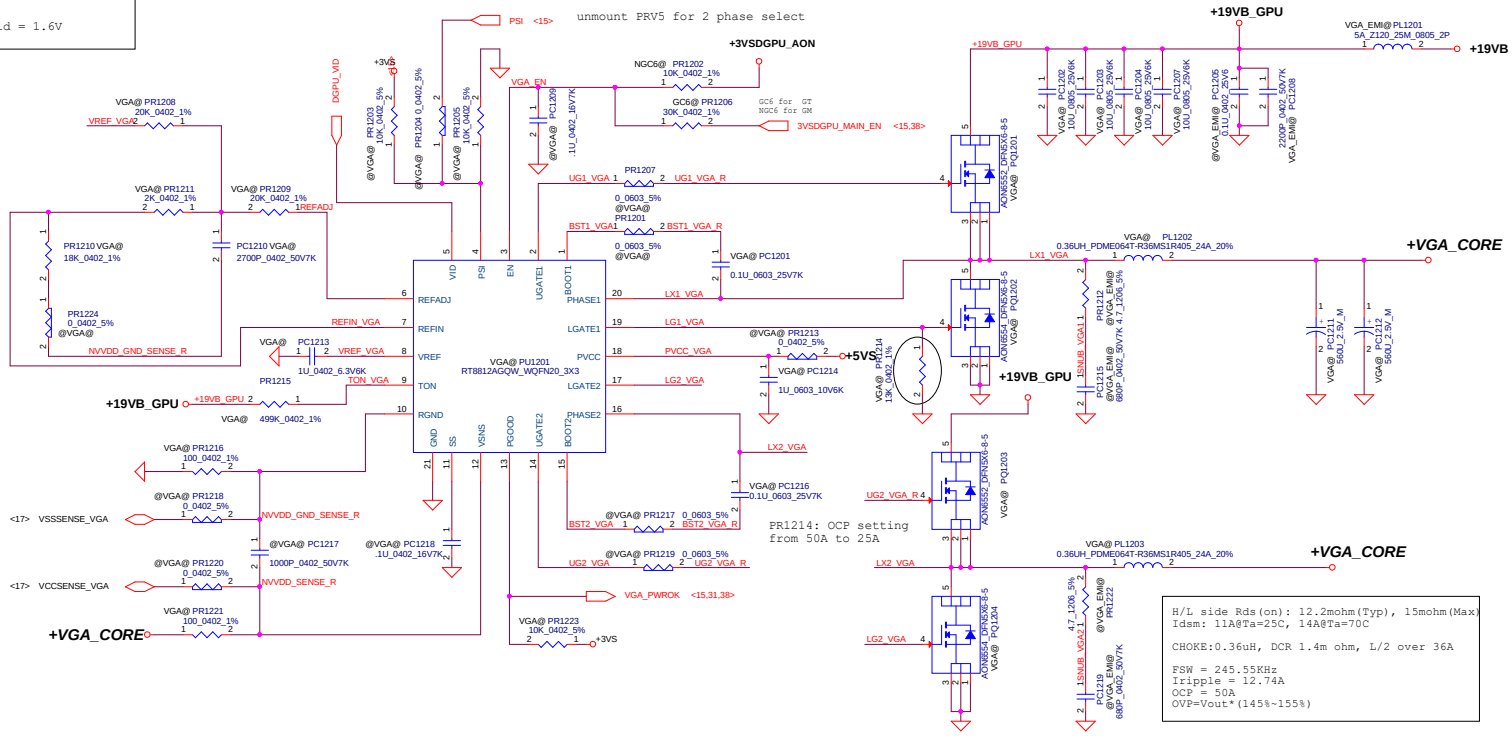

Remove GPU OTP circuit for HW request

PWM-VID Spec and component Values

PWM-VID Spec		Config B	Config C	Config D
Vmin		0.6V	0.65V	0.9V
Vmax		1.2V	1.15V	1.15V
Vboot		0.9V	0.9V	1.028V
Voltage step		6.25mV	25mV	12.5mV
N of Voltage level		96	20	20
Rrefadj	PR	20K	39K	27K
Rref1	PR	20K	30K	7.5K
Rboot	PR	2K	3K	0
Rref2=PR1209 +PR1212	PR	18K	24K	6.2K
	PR	0	3K	1.74K
C	PC	2.7nf	1.8nf	5.6nf
		N16S-GT N16V-GM	N15V-GL	N15V-GM

Security Classification	Compal Secret Data			Compal Electronics, Inc.
Issued Date	2014/03/19	Deciphered Date	2015/03/18	Title: +VGA_CORE

THIS SHEET OF ENGINEERING DRAWING IS THE PROPRIETARY PROPERTY OF COMPAL ELECTRONICS, INC. AND CONTAINS CONFIDENTIAL AND TRADE SECRET INFORMATION. THIS SHEET MAY NOT BE TRANSFERED FROM THE CUSTODY OF THE COMPETENT DIVISION OF R&D DEPARTMENT EXCEPT AS AUTHORIZED BY COMPAL ELECTRONICS, INC. NEITHER THIS SHEET NOR THE INFORMATION IT CONTAINS MAY BE USED BY OR DISCLOSED TO ANY THIRD PARTY WITHOUT PRIOR WRITTEN CONSENT OF COMPAL ELECTRONICS, INC.

Size	Document Number	Rev
Custom	A4WAL_Braswell-M/D_LA-C371P	1.0

Date: Wednesday, March 04, 2015 Sheet 51 of 55

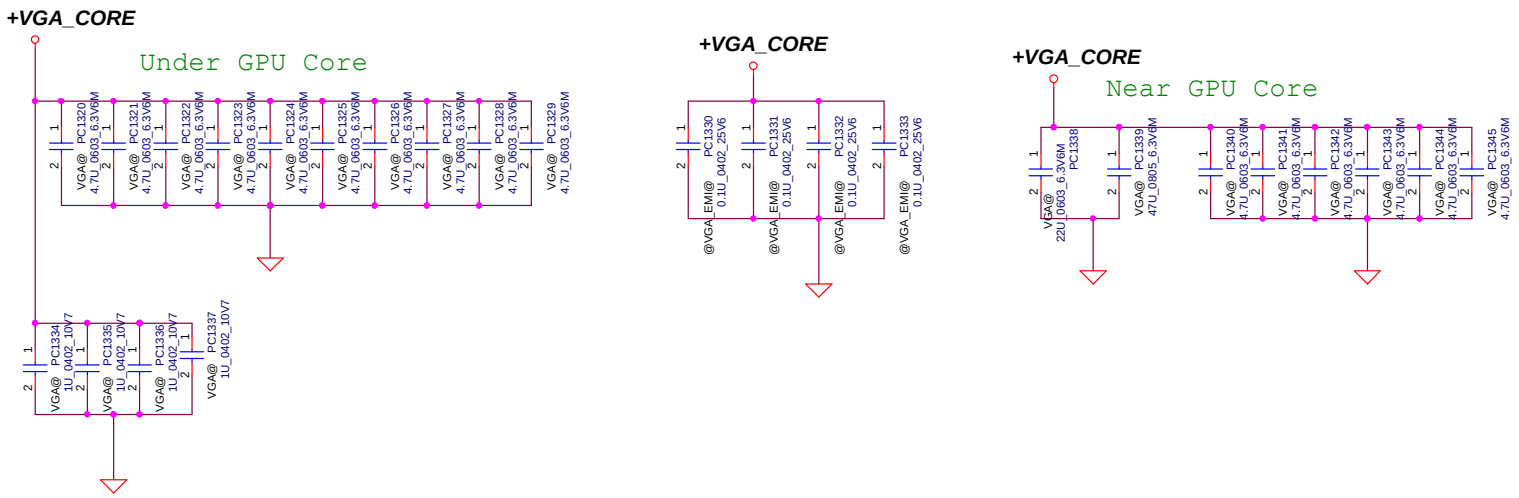

Security Classification	Compal Secret Data			Compal Electronics, Inc.
Issued Date	2014/03/19	Deciphered Date	2015/03/18	Title: VGA_CORE CAP
THIS SHEET OF ENGINEERING DRAWING IS THE PROPRIETARY PROPERTY OF COMPAL ELECTRONICS, INC. AND CONTAINS CONFIDENTIAL AND TRADE SECRET INFORMATION. THIS SHEET MAY NOT BE TRANSFERED FROM THE CUSTODY OF THE COMPETENT DIVISION OF R&D DEPARTMENT EXCEPT AS AUTHORIZED BY COMPAL ELECTRONICS, INC. NEITHER THIS SHEET NOR THE INFORMATION IT CONTAINS MAY BE USED BY OR DISCLOSED TO ANY THIRD PARTY WITHOUT PRIOR WRITTEN CONSENT OF COMPAL ELECTRONICS, INC.				Size: Custom; Document Number: A4WAL_Braswell-M/D_LA-C371P; Rev: 1.0
				Date: Wednesday, March 04, 2015; Sheet 52 of 55

Version change list (P.I.R. List)

Item	Fixed Issue	Reason for change	Rev.	PG#	Modify List	Date	Phase
1	Design update	N16-GM & N16-GT circuit need to use Config B		P.51	SE075562K80 change SE074272K00 PC1210 SD034270280 change SD034200280 PR1209 SD034750180 change SD034200280 PR1208 SD034000080 change SD034200180 PR1211 SD00000GM80 change SD000000580 PR1210 SD034174180 change SD028000080 PR1224 SD034113280 change SD034130280 PR1214	11/20	DVT
2	Design update	3.3V/5V Circuit modify for IC update		P.42	ADD SE00000M000 PC427 PC428 & PU401,PU402	11/28	DVT
3	Design update			P.41	ADD PL301, Remove PJ301	12/04	DVT
4	Design update	1.05V Circuit modify for IC change		P.44		12/04	DVT
5	Design update	VRAM Circuit modify for IC change		P.50		12/04	DVT
6	Design update	1.24V IC Change		P.46	PU801 SA000034S00 change to SA00001HW80	12/04	DVT
7	Design update	SOC_VCC output MLCC adjust		P.49	PC1023 BOM structure change to @	12/15	DVT
8	Design update	Prefer for EC_EN_1.05VALW (turn on SOC suspend)		P.44	ADD EC_EN_1.05VALW Link to circuit	12/15	DVT
9	Design update	ADD PR610 for EC controll		P.44	ADD PR610	12/15	DVT
10	Design update	8207P have spike on S5, so change use ic return to 8207M		P.43	remove PC509.PC511.PC516~PC519, ADDPC509 change RT8207P to RT8207M change PR507 to 887K ohm for frequency	12/16	DVT
11	Design update	common part change			all bead change to SM01000P200	12/16	DVT
12	Design update	1.24V Enable pin need bigger voltage		P.46	PR809 change to R-short PC804 change to "@" PR803 change to 1M and "@"	12/25	DVT
13	Design update	Combine +1.05VALW and +SOC_VNN to +1.05VALW		P.44 & P.49	All SOC_VNN change to 1.05VALW	12/26	DVT
14	Design update	HW sequency change Let efficiency better		P.44 P.46	1.05VALW PG enable 1.24V no pull high PU801 pin6 connect 3VALW	12/26	DVT
15	Design update	HW sequency change		P.45	+1.15VALW EN change to SUP#,	12/26	DVT
16	Design update	PJP201 PCB pad is too short		P.40	Part number change to SP020017H00	12/27	DVT
17	Design update	Let spok signal has rail to discharge		P.44	PR602 Delete"@"	12/27	DVT
18	Design update	Reduce DIS use 0hm pcs		P.51	PR1224,PR1204,PR1207,PR1201,PR1217,PR1219 change to R-short	12/27	DVT
19	Design update	Reduce UMA use 0hm pcs,PVT back to R-short			PR601,PR712,PR329 change to 1ohm PR933,PR906 change to R-short	12/27	DVT
20	Design update	Follow HW command		P.50	PR1102 change to 10K	12/29	DVT
21	Design update	Follow FAE command			PC403,PC416,PC605,PC1105 change to 0.1U_0603_25V7K	12/31	DVT
22	Design update	Design for HW sequency need		P.41	Add PR321 (BOM Structure :@) link to +3VLP	1/7	PVT
23	Design update	Design for sourcer need		P.43	Change PQ502 to AON7702	1/8	DVT
24	Design update	Follow HW command			PR610 instead PR601 PR509 PR510 change to 1 ohm PC515 change to @ PR1102 change to 15k	1/8	DVT
25	Design update	Follow HW command-1.24V		P.46	POP PR803	1/12	DVT
26	Design update	Change for 1.35V Power budget current limit		P.43	Change PR502 to 9.1K	2/3	PVT
27	Design update	Change all 1 ohm to 0 ohm for PVT			Change PR329.PR509.PR510.PR610.PR712 to 0 ohm	2/6	PVT
28	Design update	Follow HW command		P.47 P.44	PR901 unplug & 1.05V PG pull high resistor"@" 3V & 5V IC Pin 16 connect Pin17	2/10	PVT

Security Classification	Compal Secret Data		
Issued Date	2014/03/19	Deciphered Date	2015/03/18

THIS SHEET OF ENGINEERING DRAWING IS THE PROPRIETARY PROPERTY OF COMPAL ELECTRONICS, INC. AND CONTAINS CONFIDENTIAL AND TRADE SECRET INFORMATION. THIS SHEET MAY NOT BE TRANSFERRED FROM THE CUSTODY OF THE COMPETENT DIVISION OF R&D DEPARTMENT EXCEPT AS AUTHORIZED BY COMPAL ELECTRONICS, INC. NEITHER THIS SHEET NOR THE INFORMATION IT CONTAINS MAY BE USED BY OR DISCLOSED TO ANY THIRD PARTY WITHOUT PRIOR WRITTEN CONSENT OF COMPAL ELECTRONICS, INC.

Compal Electronics, Inc.

Title: PWR_PIR

Size: Custom | Document Number: A4WAL_Braswell-M/D_LA-C371P | Rev: 1.0

Date: Wednesday, March 04, 2015 | Sheet 53 of 55

Version change list (P.I.R. List)

Item	Fixed Issue	Reason for change	Rev.	PG#	Modify List	Date	Phase
1	Design update	Follow HW command		P.42	1.PR5090,PR610改改改 short 2.1.15VALW的的PG多多多多in ,net name 改改1.15VALW_PWRGD, 然然然然然U 10K ohm 1.8VALW. 3.將將1.15VALW_PWRGD串串多串串ohm 然然然,串接接GG的的NABLE,同同將將R933的的 short改改改改改	2/12	PVT
2	Design update						
3	Design update						
4	Design update						
5	Design update						
6	Design update						
7	Design update						
8	Design update						
9	Design update						
10	Design update						
11	Design update						
12	Design update						
13	Design update						
14	Design update						
15	Design update						
16	Design update						
17	Design update						
18	Design update						
19	Design update						
20	Design update						
21	Design update						
22	Design update						
23	Design update						
24	Design update						
25	Design update						
26	Design update						
27	Design update						
28	Design update						PVT

Security Classification	Compal Secret Data			Compal Electronics, Inc.
Issued Date	2014/03/19	Deciphered Date	2015/03/18	Title: PWR_PIR
				Size: Custom; Document Number: A4WAL_Braswell-M/D_LA-C371P; Rev: 1.0
				Date: Wednesday, March 04, 2015; Sheet 54 of 55

THIS SHEET OF ENGINEERING DRAWING IS THE PROPRIETARY PROPERTY OF COMPAL ELECTRONICS, INC. AND CONTAINS CONFIDENTIAL AND TRADE SECRET INFORMATION. THIS SHEET MAY NOT BE TRANSFERED FROM THE CUSTODY OF THE COMPETENT DIVISION OF R&D DEPARTMENT EXCEPT AS AUTHORIZED BY COMPAL ELECTRONICS, INC. NEITHER THIS SHEET NOR THE INFORMATION IT CONTAINS MAY BE USED BY OR DISCLOSED TO ANY THIRD PARTY WITHOUT PRIOR WRITTEN CONSENT OF COMPAL ELECTRONICS, INC.

A4WAL Power UP Sequence
2015-02-06
EC V011T05

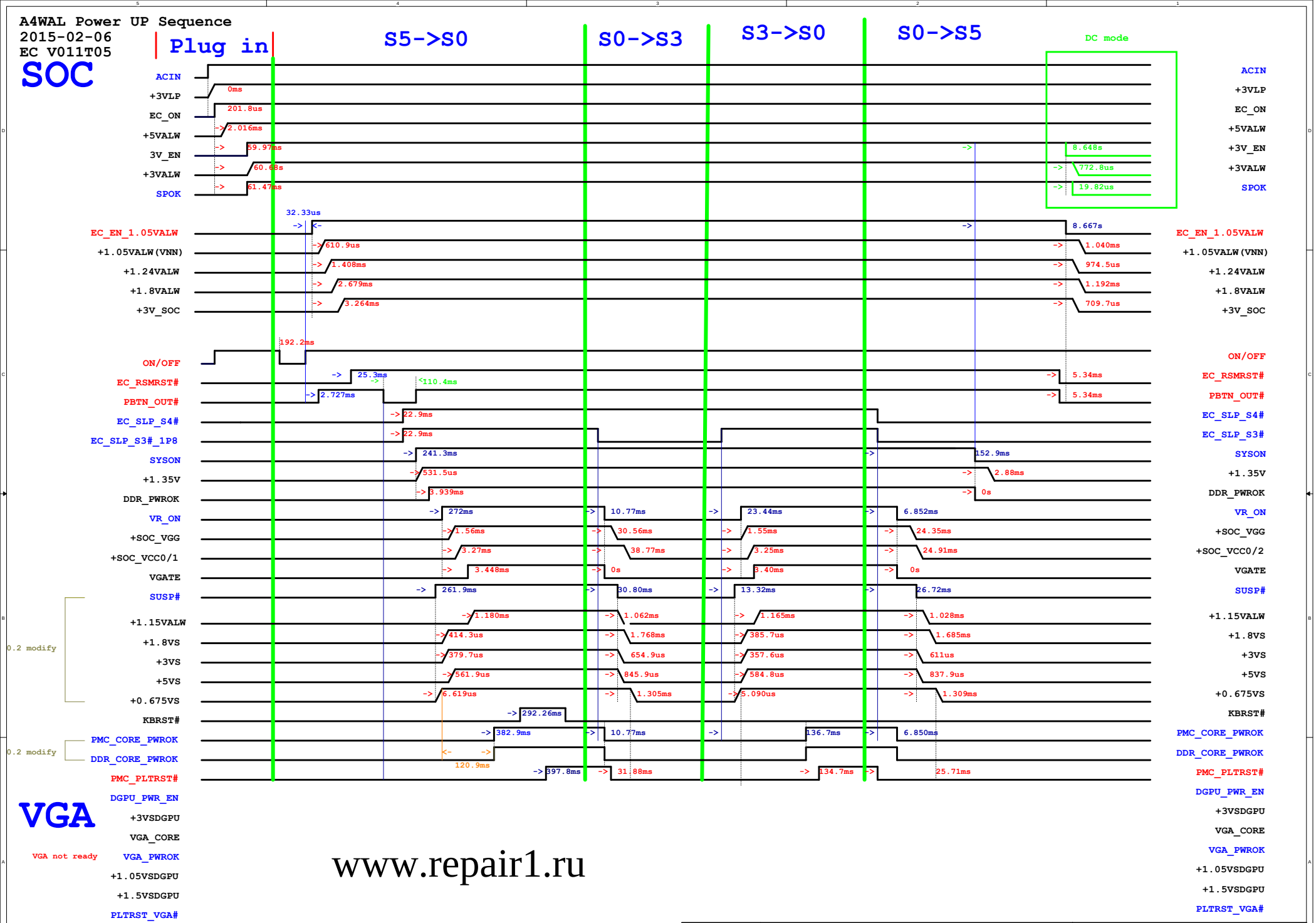

www.repair1.ru

Security Classification	Compal Secret Data		
Issued Date	2014/08/21	Deciphered Date	2015/08/21

THIS SHEET OF ENGINEERING DRAWING IS THE PROPRIETARY PROPERTY OF COMPAL ELECTRONICS, INC. AND CONTAINS CONFIDENTIAL AND TRADE SECRET INFORMATION. THIS SHEET MAY NOT BE TRANSFERED FROM THE CUSTODY OF THE COMPETENT DIVISION OF R&D DEPARTMENT EXCEPT AS AUTHORIZED BY COMPAL ELECTRONICS, INC. NEITHER THIS SHEET NOR THE INFORMATION IT CONTAINS MAY BE USED BY OR DISCLOSED TO ANY THIRD PARTY WITHOUT PRIOR WRITTEN CONSENT OF COMPAL ELECTRONICS, INC.

Compal Electronics, Inc.

Title: Power Sequence

Size: C | Document Number: A4WAL_Braswell-M/D_LA-C371P | Rev: 1.0

Date: Wednesday, March 04, 2015 | Sheet 55 of 55