Sep. ' 10

Kendo-3 UMA Block Diagram

Project Code: 91.4KE01.001
PCB(Raw Card): H0220-SE

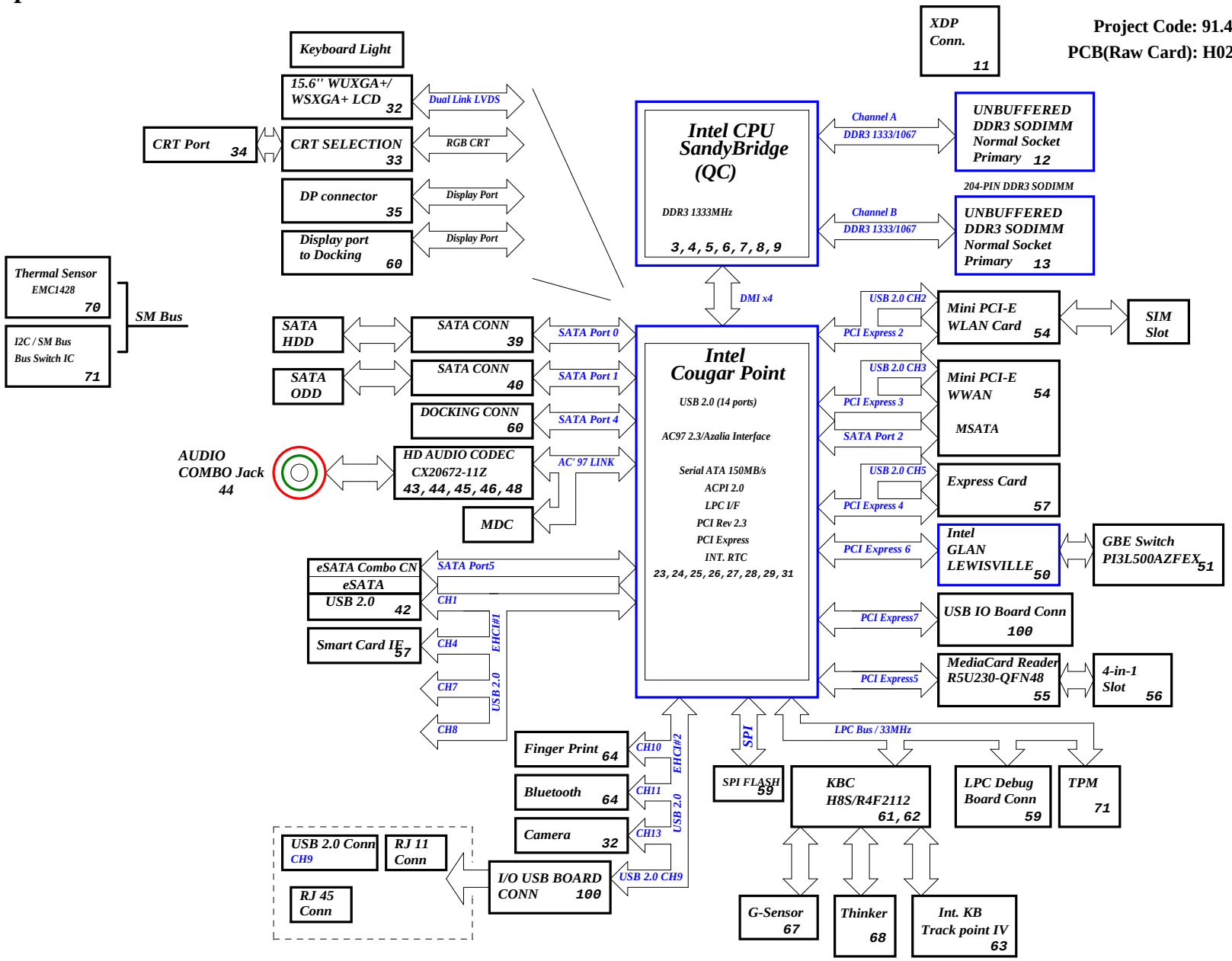

PCB Layer Stackup

L1:TOP
L2:GND
L3:Signal1
L4:VCC
L5:Signal2
L6:Signal 3
L7:GND
L8:BOTTOM

Battery Charger/Selector BQ24742RHDR 74	
INPUTS	OUTPUTS
DOCK_PWR20_F	M-BAT-PWR S-BAT-PWR
System DC/DC TPS51222RTV 78	
VINT20	VCC5M VCC3M
CPU DC/DC VT1316MFQ/VT1317S 79	
VINT20	VCCCPUCORE
VCC5M	
VCC1R5A/DDR3_REF VCC0R75B TPS51116 86	
VCC5M	DDR3_VREF VCC0R75B VCC1R5A
VCC1R8B TPS62290 89	
VCC3M VCC5M	VCC1R8B
VCC1R05B_VTT VCC1R05LAN VT358/VT357 84,85	
VINT20 VCC5M	VCC1R05B_VTT VCC1R05LAN

<Variant Name>

緯創資通 Wistron Corporation
21F, 88, Sec.1, Hsin Tai Wu Rd., Hsichih, Taipei Hsien 221, Taiwan, R.O.C.

Title: Block Diagram

Size	Document Number	Rev
Custom	Kendo-3 UMA	SE

Date: Thursday, October 07, 2010 Sheet 1 of 107

RESISTOR

Symbol name	Value	Tolerance (J: 5%, F: 1%, D: 0.5%, B: 0.1 %)	Rating 0402=> 1/16W, 25V 0603 => 1/16W, 75V 0805 => 1/10W, 100V	Size 2=>0402, 3=>0603, 5=>0805, 6=>1206, 0=>1210
10KR3	10K Ohm	If no letter, it means J: 5%	1/16W, 75V	0603
33D3R5	33.3 Ohm	If no letter, it means J: 5%	1/10W, 100V	0805
1KR3F	1K Ohm	F: 1%	1/16W, 75V	0603

The naming rule is value + R + size + tolerance
For the value, it can be read by the number before R. (R means resistor)
For the tolerance, it can be read from the last letter.
For the rating, we don't show on the symbol name.
For the size, R2=>0402, R3=>0603, R5=>0805,....

CAPACITOR

Symbol name	Value	Tolerance (M: +/-20, K: +/-10, Z: +80/-20)	Rating	Size 2=>0402, 3=>0603, 5=>0805, 6=>1206, 0=>1210
SCD1U10V2MX-1	0.1uF	M/X5R	10V	0402
SC10U6D3V5MX	10uF	M/X5R	6.3V	0805
SC2D2U16V5ZY	2.2uF	Z/Y5V	16V	0805

The naming rule is
Capacitor type + value + rating + size + tolerance + material
SCD1U10V2MX-1
SC=> SMT Ceremic, TC=> POS cap or SP cap
D1U => 0.1uF
10V => the voltage rating is 10V
2=> 0402, 3=>0603, 5=>0805
M=>tolerance M, K, Z
X=> X7R/X5R, Y=> Y5V
-1 => symbol version, nonsense to EE characteristic

PLANAR_ID[3..0]

PCH GPIOn	39	38	37	36	Planar ID Version	Planar PCB Version
PLANAR_IDn	3	2	1	0		
	0	0	0	0	SDV	SA
	0	0	0	1	SDV	SA
	0	0	1	0		
	0	0	1	1	FVT	SC
	0	1	0	0		
	0	1	0	1	SIT	SE
	0	1	1	0		
	0	1	1	1		

EC HISTORY

Stage	Date	EC No.	Page	Note
SDV	0222	001		Initial Release

PCI TABLE

DEVICE	IDSEL	IRQ (Default)	REQ# / GNT#
MINIPCI SLOT	AD18	F, G	REQ# 3/ GNT#3
CARDBUS R5C811	AD16	SERIRQ	REQ#0 / GNT#0
USB UHCI	AD29	A, C, D	
USB 2.0 EHCI	AD29	H	
DMI-to-PCI/ AC97 Modem/ AC97 Audio	AD30	B B	
LPC Bridge IDE SATA SMBus	AD31	C C B	
PCI Express	AD28	A, B, C, D	

<Variant Name>

緯創資通 **Wistron Corporation**
21F, 88, Sec.1, Hsin Tai Wu Rd., Hsichih,
Taipei Hsien 221, Taiwan, R.O.C.

Title: ***EC HISTORY***

Size: A3 | Document Number: **Kendo-3 UMA** | Rev: **SE**

Date: Thursday, October 07, 2010 | Sheet 2 of 107

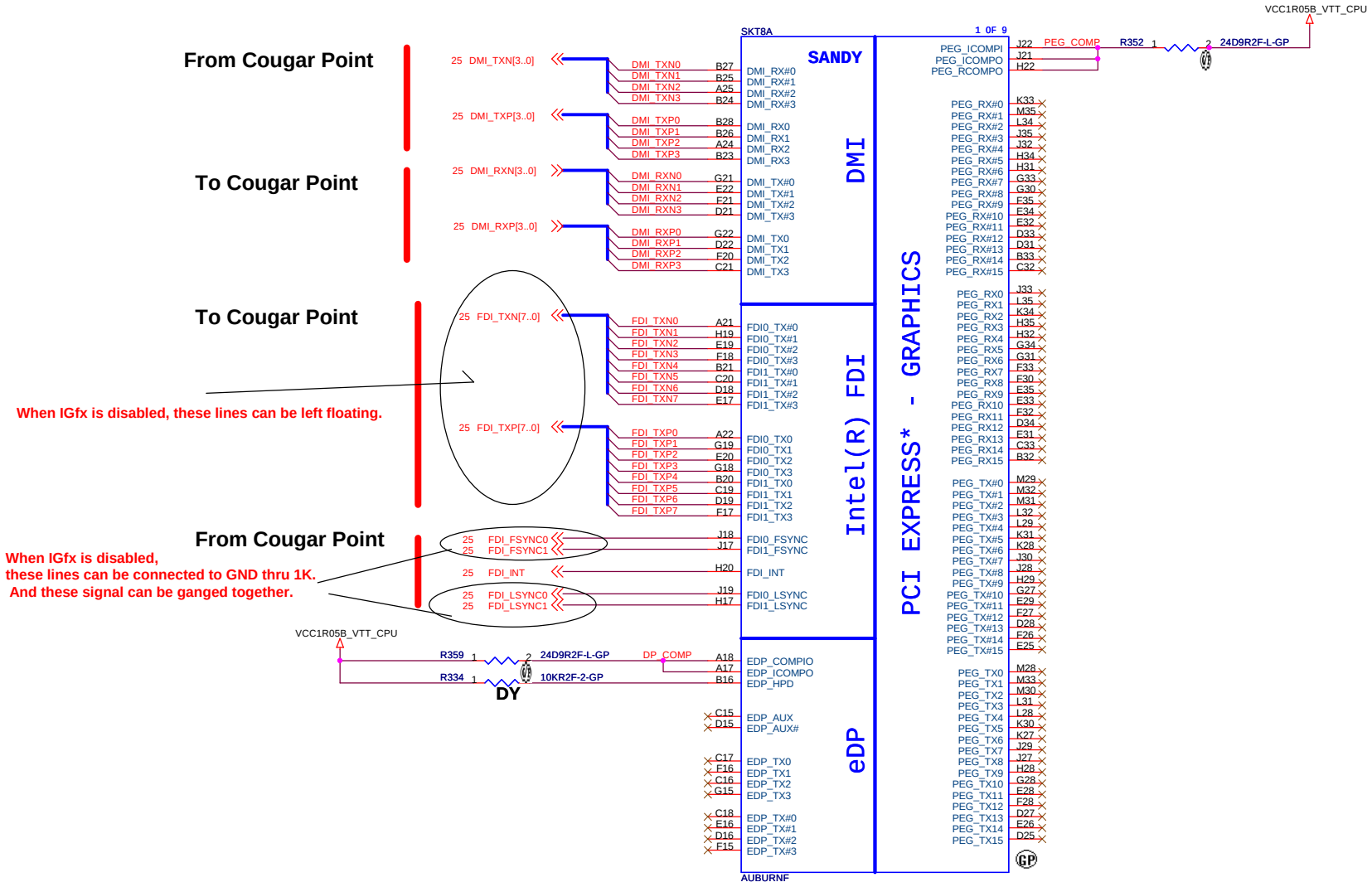

<Variant Name>

Wistron Corporation
21F, 88, Sec.1, Hsin Tai Wu Rd., Hsichih,
Taipei Hsien 221, Taiwan, R.O.C.

Title: **CPU(1/7):DMI/PEG/FDI**

Size	Document Number	Rev
A3	Kendo-3 UMA	SE

Date: Thursday, October 07, 2010 Sheet 3 of 107

Need to refer Intel Design Guide to place CPU and route wire.

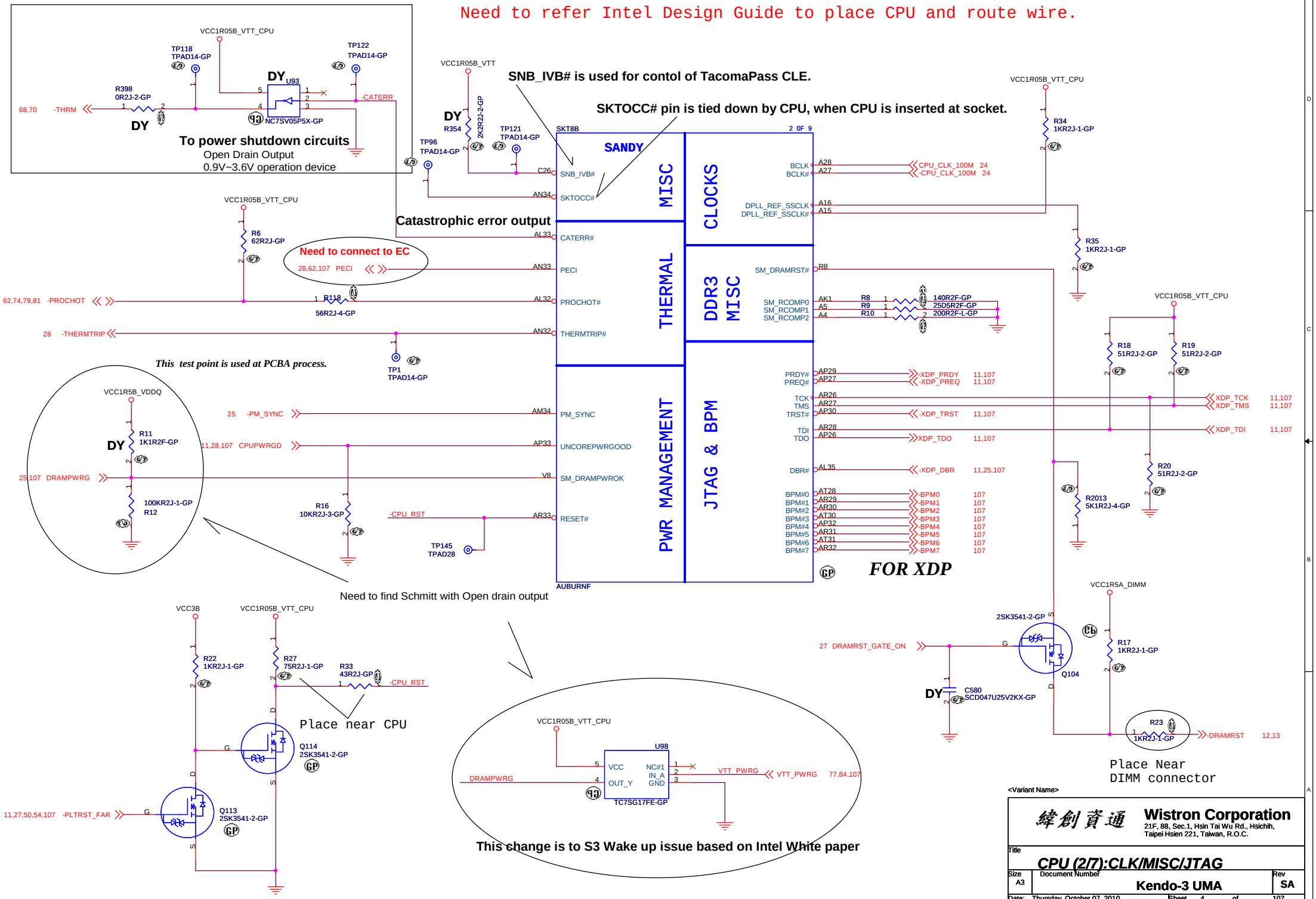

<Variant Name>
緯創資通 Wistron Corporation
21F, 88, Sec.1, Hsin Tai Wu Rd., Hsichih, Taipei Hsien 221, Taiwan, R.O.C.

Title: CPU (2/7):CLK/MISC/JTAG

Size: A3 | Document Number: Kendo-3 UMA | Rev: SA

Date: Thursday, October 07, 2010 | Sheet 4 of 107

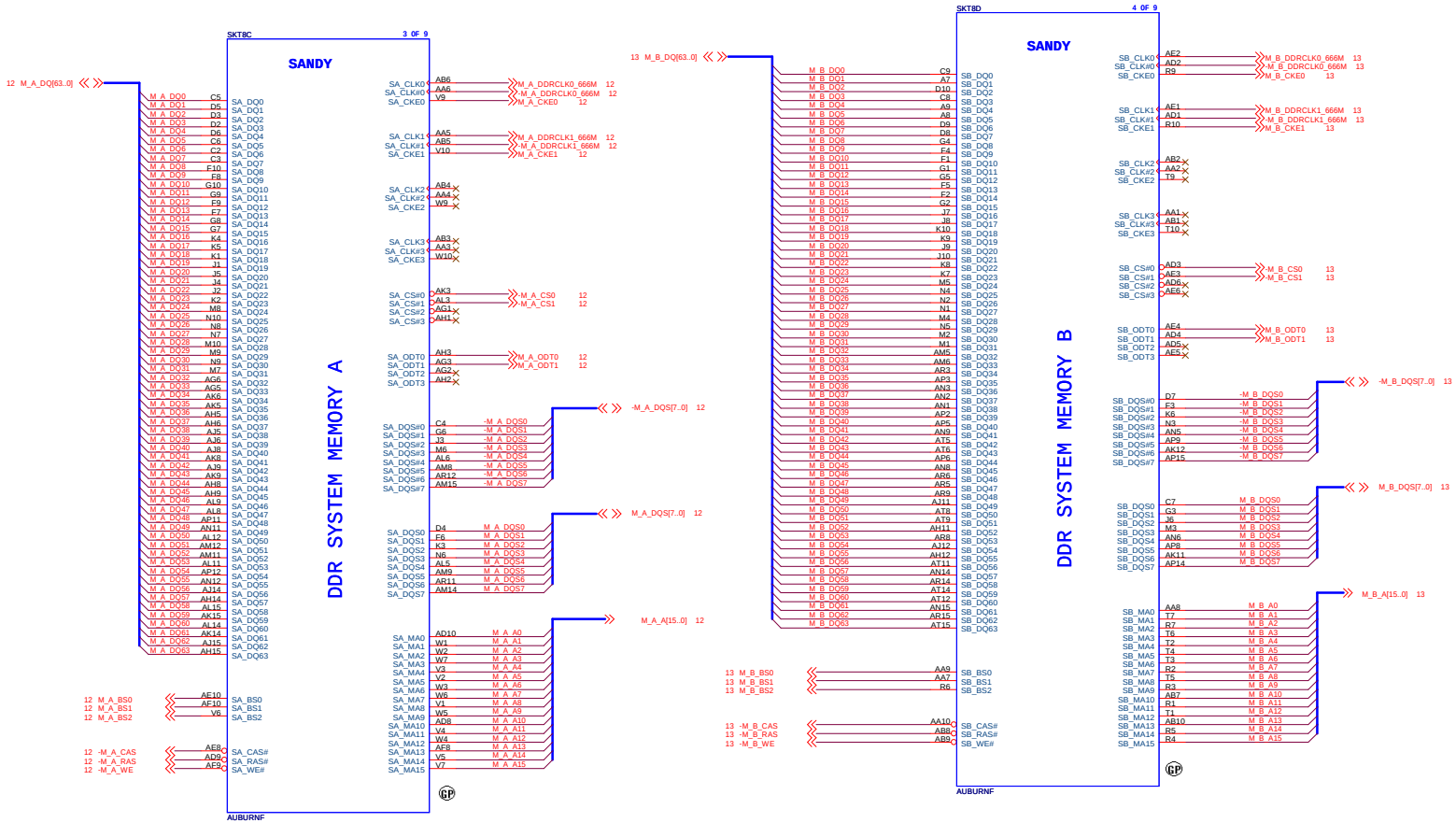

<Variant Name>

緯創資通 **Wistron Corporation**
21F, 88, Sec.1, Hsin Tai Wu Rd., Hsichih,
Taipei Hsien 221, Taiwan, R.O.C.

Title: ***CPU(3/7): DDR3 CH-A/CH-B***

Size	Document Number	Rev
A2	Kendo-3 UMA	SE

Date: Thursday, October 07, 2010 Sheet 5 of 107

Should be add pulldown 1K based on configration specification.

When PEG Lane reversible function is used,
CFG2 should have pull down.
eDP Function is used, CFG4 port should be tie Down.
If not, this port can be left as floating.
When PCIe Port Bifurcation function is used,
CFG5 & 6 should have pull down.
Low/Low : x8 , x4 and x4
Low/High : Reserved
High/Low : x8 and x8
High/High : x16

When PEG Defer training function is used,
CFG7 should have pull down.

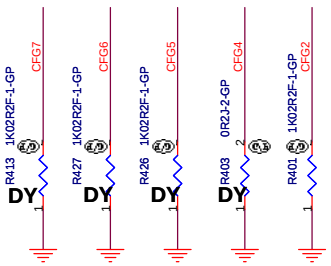

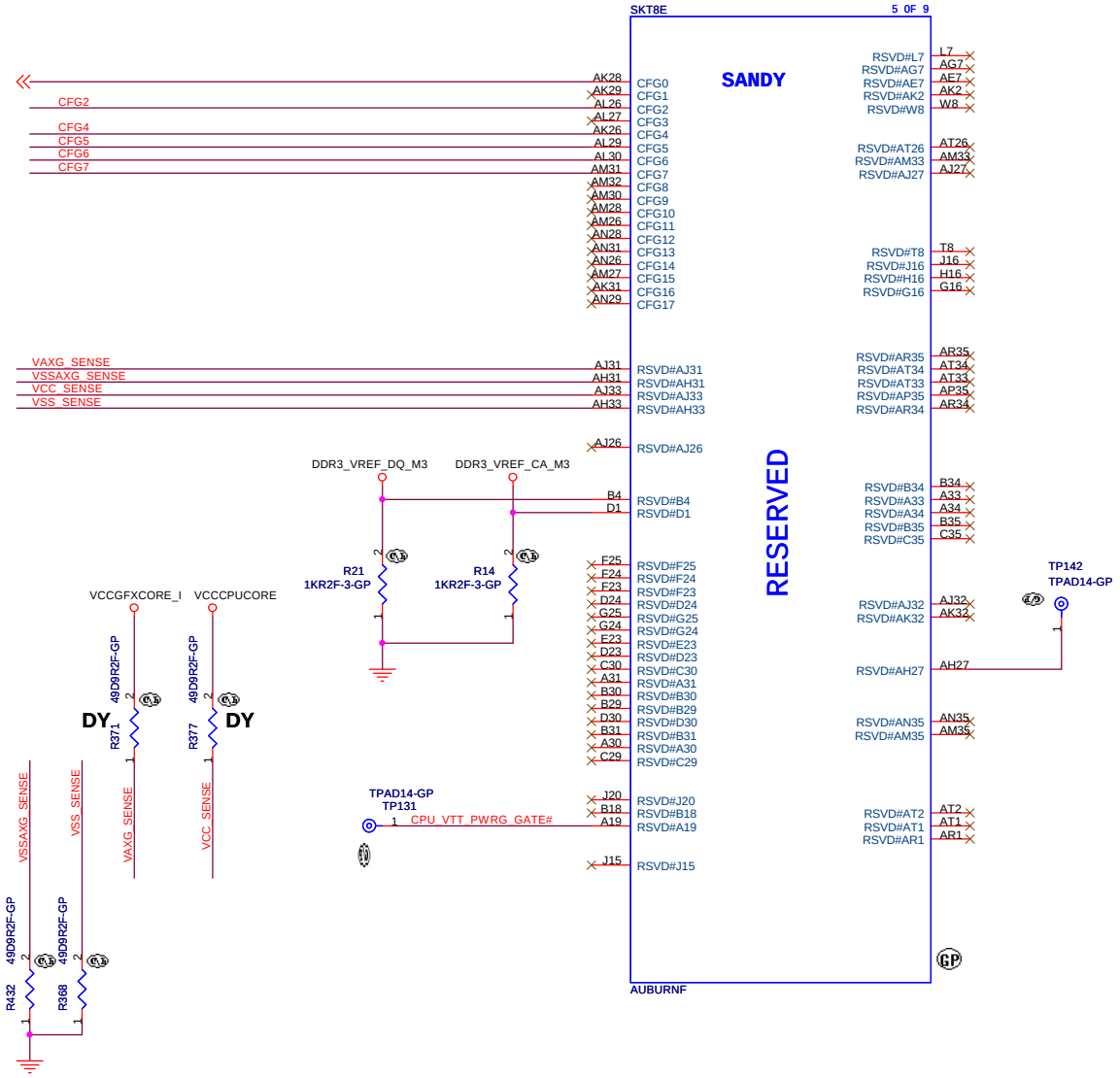

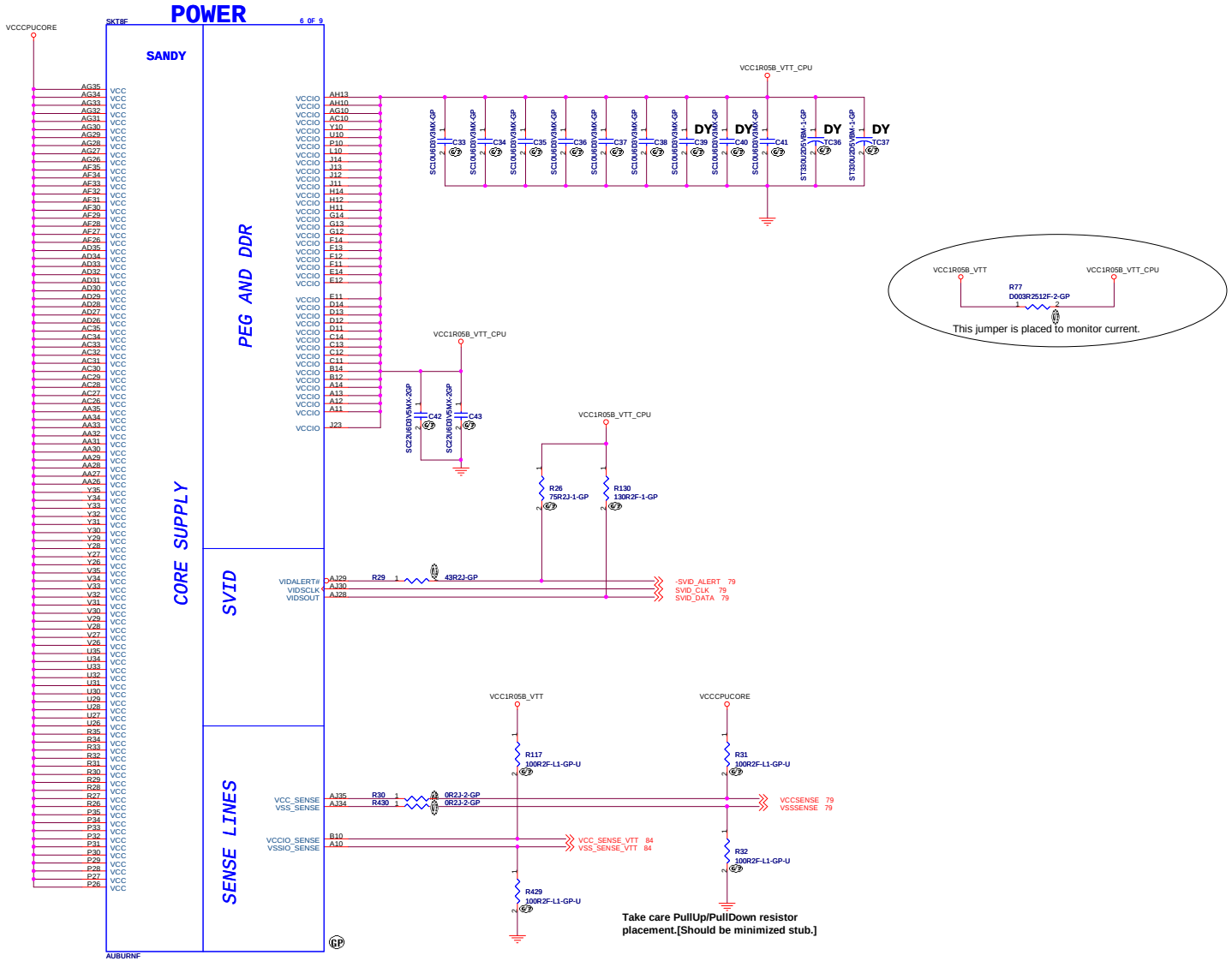

<Variant Name>

緯創資通 **Wistron Corporation**
21F, 88, Sec.1, Hsin Tai Wu Rd., Hsichih,
Taipei Hsien 221, Taiwan, R.O.C.

Title: **CPU(5/7): PWR**

Size	Document Number	Rev
A2	Kendo-3 UMA	SE

Date: Thursday, October 07, 2010 Sheet 7 of 107

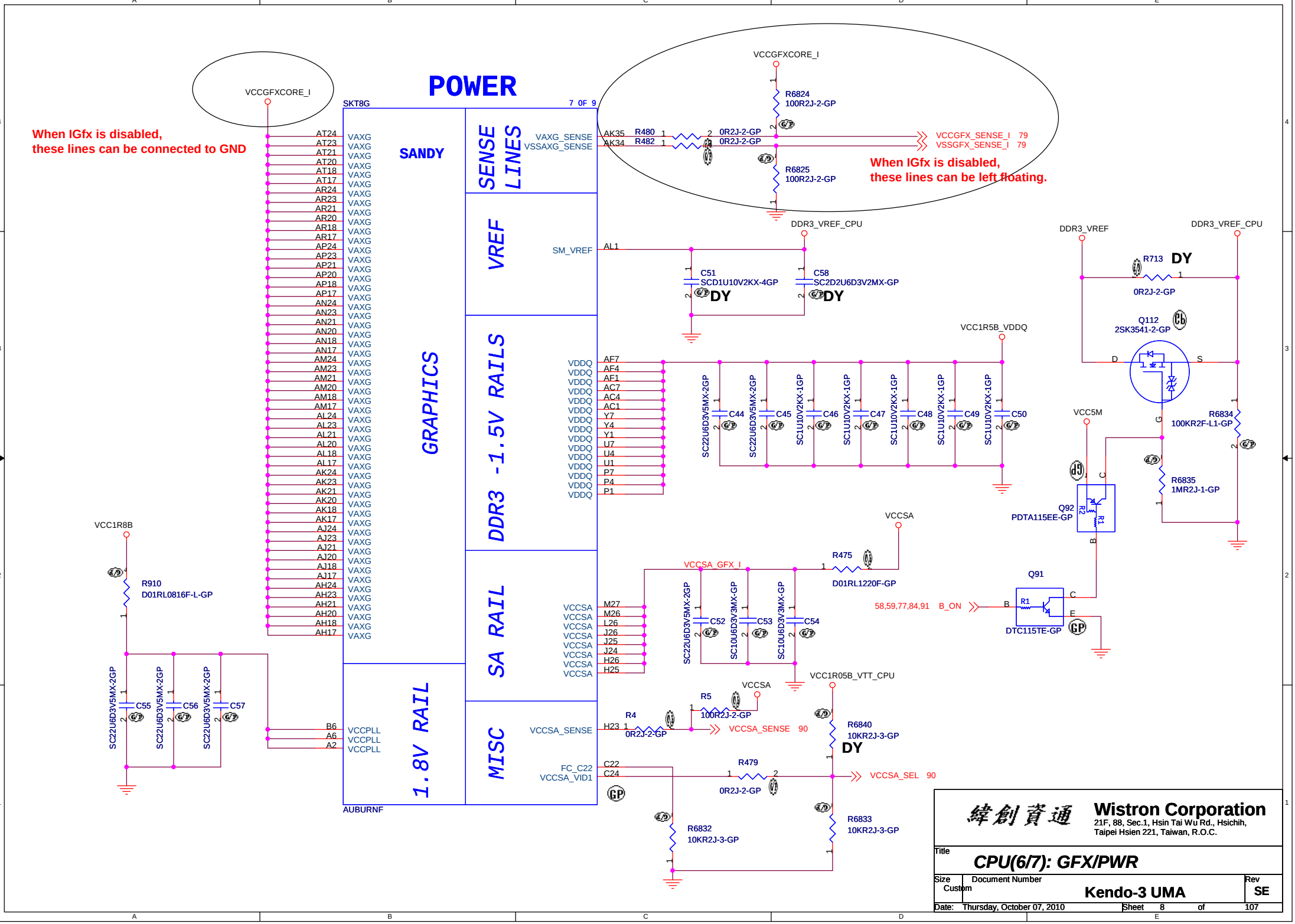
POWER
SANDY
GRAPHICS
SKT8G
AUBURNF
SENSE LINES
VREF
DDR3 -1.5V RAILS
SA RAIL
1.8V RAIL
MISC
When IGfx is disabled, these lines can be connected to GND
When IGfx is disabled, these lines can be left floating.
VCCGFXCORE_I
VAXG_SENSE
VSSAXG_SENSE
SM_VREF
DDR3_VREF_CPU
DDR3_VREF
VCC1R5B_VDDQ
VCCSA
VCCSA_GFX_I
VCC1R8B
VCC1R05B_VTT_CPU
VCCSA_SENSE
FC_C22
VCCSA_VID1
VCCPLL
VCCSA_SEL
B_ON
VCC5M
R6824 100R2J-2-GP
R6825 100R2J-2-GP
R480 0R2J-2-GP
R482 0R2J-2-GP
VCCGFX_SENSE_I 79
VSSGFX_SENSE_I 79
C51 SCD1U10V2KX-4GP DY
C58 SC2D2U6D3V2MX-GP DY
R713 DY 0R2J-2-GP
Q112 2SK3541-2-GP
R6834 100KR2F-L1-GP
R6835 1MR2J-1-GP
Q92 PDTA115EE-GP
Q91 DTC115TE-GP
R910 D01RL0816F-L-GP
R475 D01RL1220F-GP
R5 100R2J-2-GP
R4 0R2J-2-GP
R479 0R2J-2-GP
R6840 10KR2J-3-GP DY
R6833 10KR2J-3-GP
R6832 10KR2J-3-GP
VCCSA_SENSE 90
VCCSA_SEL 90
58,59,77,84,91 B_ON
Wistron Corporation
21F, 88, Sec.1, Hsin Tai Wu Rd., Hsichih, Taipei Hsien 221, Taiwan, R.O.C.
Title
CPU(6/7): GFX/PWR
Size Custom
Document Number
Kendo-3 UMA
Rev SE
Date: Thursday, October 07, 2010
Sheet 8 of 107

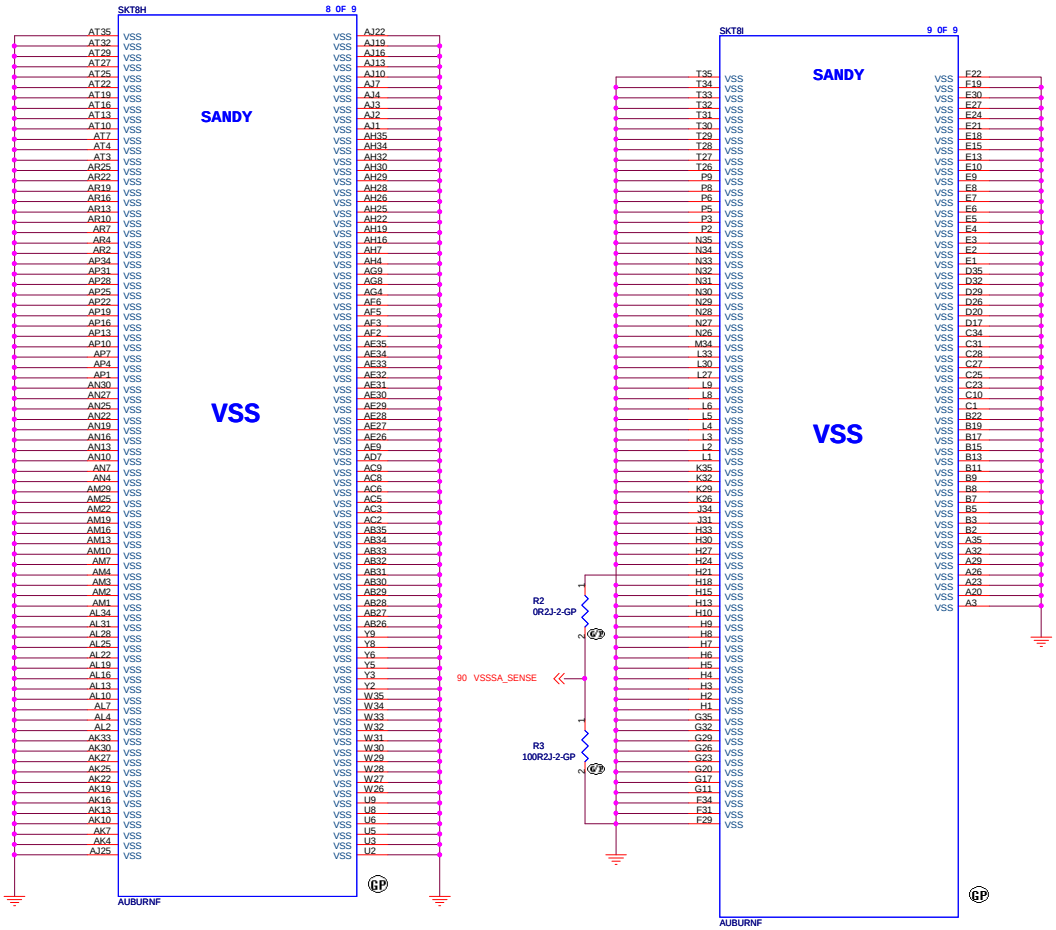

<Variant Name>

緯創資通 **Wistron Corporation**
21F, 88, Sec.1, Hsin Tai Wu Rd., Hsichih,
Taipei Hsien 221, Taiwan, R.O.C.

Title: ***CPU(7/7): GND***

Size	Document Number	Rev
C	Kendo-3 UMA	SE

Date: Thursday, October 07, 2010 Sheet 9 of 107

BLANK

<Variant Name>

緯創資通 Wistron Corporation
21F, 88, Sec.1, Hsin Tai Wu Rd., Hsichih,
Taipei Hsien 221, Taiwan, R.O.C.

Title: BLANK

Size	Document Number	Rev
A3	Kendo-3 UMA	SE

Date: Thursday, October 07, 2010 Sheet 10 of 107

Signal	REF DES	Enable	Disable
TDO	R235	ASM	NO_ASM
TRST#	R234	ASM	ASM
DBRST#	R145	ASM	ASM
RESET#	R49	ASM	NO_ASM
CFG0	R71	ASM	NO_ASM
PWRGD	R125	ASM	NO_ASM
BPWRG	R67	ASM	NO_ASM
	CN20	ASM	NO_ASM

LOGIC

Signal	REF DES	Enable	Disable
TDO	R40	220	NO_ASM
	R53	100	NO_ASM
TMS	R45	220	NO_ASM
	R51	100	NO_ASM
TDI	R44	220	NO_ASM
	R52	100	NO_ASM
TCK	R50	51	51
MPWRG	R46	ASM	NO_ASM
	R48	ASM	NO_ASM
	CN5	ASM	NO_ASM

LOGIC

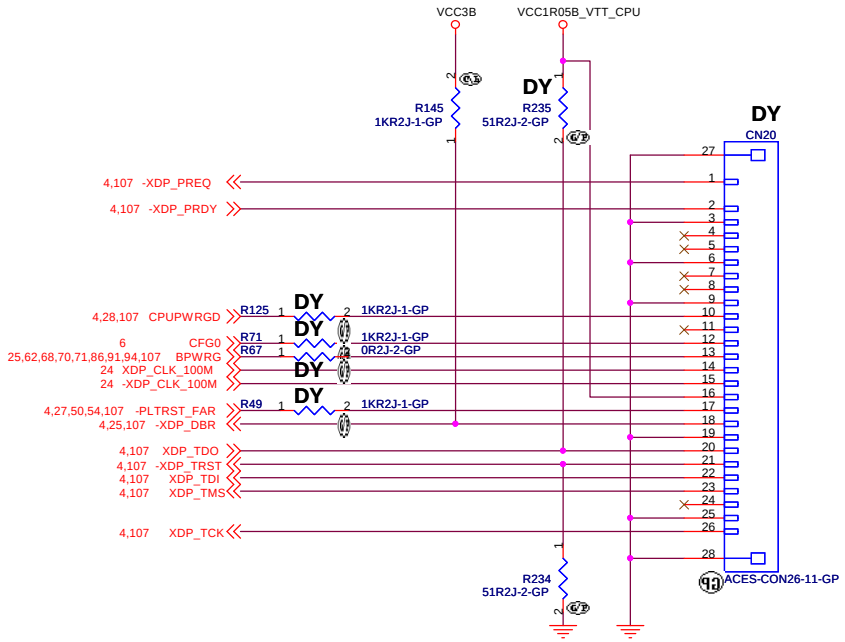

CPU XDP SFF 26pin IF
Pin 1 OBSFN_A0 (PREQ#, I/O)
Pin 2 OBSFN_A1 (PRDY#, I/O)
Pin 3 GND
Pin 4 OBSDATA_A0 (Open, I/O)
Pin 5 OBSDATA_A1 (Open, I/O)
Pin 6 GND
Pin 7 OBSDATA_A2 (Open, I/O)
Pin 8 OBSDATA_A3 (Open, I/O)
Pin 9 GND
Pin 10 HOOK0 (PWRGD, In)
Pin 11 HOOK1 (BP_PWRGD_RST#, Out)
Pin 12 HOOK2 (CFG0, Out)
Pin 13 HOOK3 (vr_READYSYS_PWROK,Out)
Pin 14 HOOK4 (BCLK, In)
Pin 15 HOOK5 (BCLK#, In)
Pin 16 VCCOBS_AB (VCCP Voltage of CPU, In)
Pin 17 HOOK6 (RESET#, Out)
Pin 18 HOOK7 (DBR#, Out)
Pin 19 GND
Pin 20 TDO, In
Pin 21 TRST#, Out
Pin 22 TDI, Out
Pin 23 TMS, Out
Pin 24 TCK1 (Open)
Pin 25 GND
Pin 26 TCK0 ,Out

In production, All of parts should be not moounted except of pulldown 51 ohm on TCK.

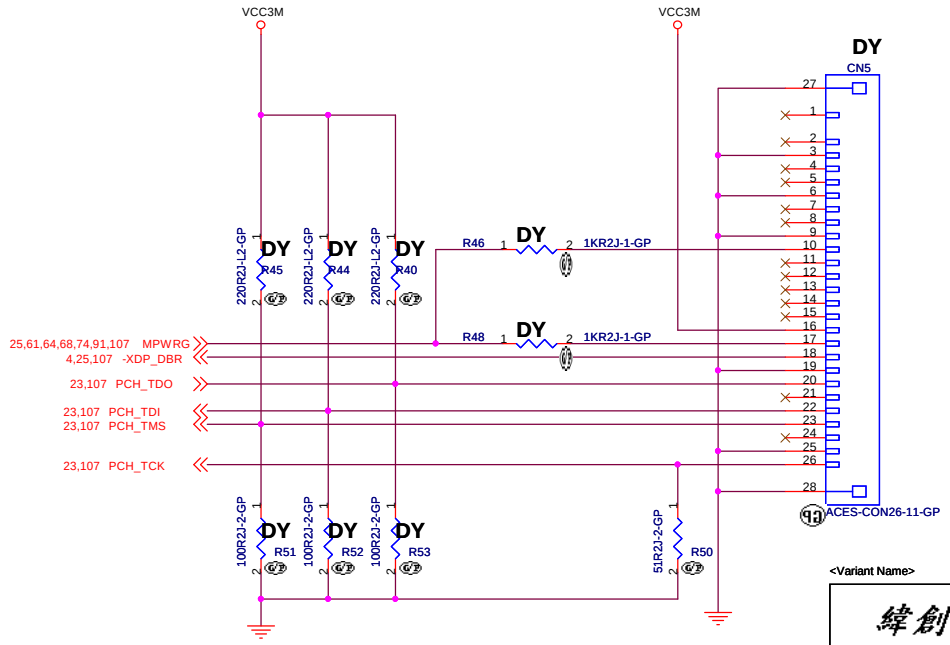

DEBUG Interface for PCH.

PCH XDP SFF 26pin IF
Pin 1 OBSFN_A0 (Open), I/O)
Pin 2 OBSFN_A1 (Open, I/O)
Pin 3 GND
Pin 4 OBSDATA_A0 (Open, I/O)
Pin 5 OBSDATA_A1 (Open, I/O)
Pin 6 GND
Pin 7 OBSDATA_A2 (Open, I/O)
Pin 8 OBSDATA_A3 (Open, I/O)
Pin 9 GND
Pin 10 HOOK0 (RSMRST#, In)
Pin 11 HOOK1 (BP_PWRGD_RST#, Out)
Pin 12 HOOK2 (Open)
Pin 13 HOOK3 (Open)
Pin 14 HOOK4 (Open)
Pin 15 HOOK5 (Open)
Pin 16 VCCOBS_AB (3.3VSUS, In)
Pin 17 HOOK6 (RSMRST#, Out)
Pin 18 HOOK7 (DBR#, Out)
Pin 19 GND
Pin 20 TDO (JTAG, In)
Pin 21 TRST# (Open)
Pin 22 TDI (JTAG, Out)
Pin 23 TMS (JTAG, Out)
Pin 24 TCK1 (Open)
Pin 25 GND
Pin 26 TCK0 (JTAG, Out)

<Variant Name>

緯創資通 **Wistron Corporation**
21F, 88, Sec.1, Hsin Tai Wu Rd., Hsichih,
Taipei Hsien 221, Taiwan, R.O.C.

Title: ***XDP CONNECTOR***

Size	Document Number	Rev
A3	Kendo-3 UMA	SE

Date: Thursday, October 07, 2010 Sheet 11 of 107

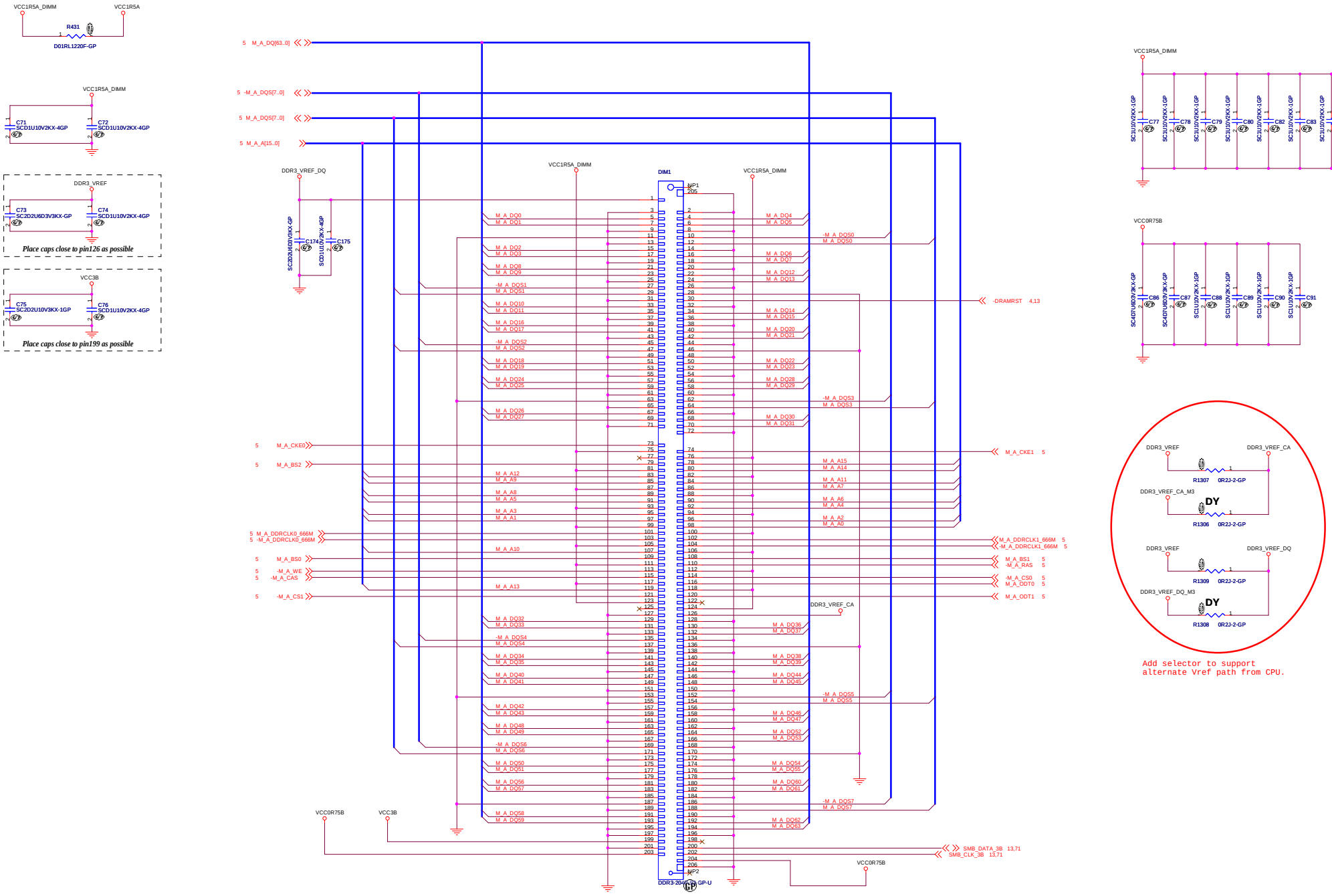

Add selector to support alternate Vref path from CPU.

SPD Address : 50h

This connector should be placed on far side from CPU.

<Variant Name>

緯創資通 **Wistron Corporation**
21F, 88, Sec.1, Hsin Tai Wu Rd., Hsichih, Taipei Hsien 221, Taiwan, R.O.C.

Title: **DDR3 SODIMM CH-A Primary**

Size	Document Number	Rev
A2	Kendo-3 UMA	SE

Date: Thursday, October 07, 2010 Sheet 12 of 107

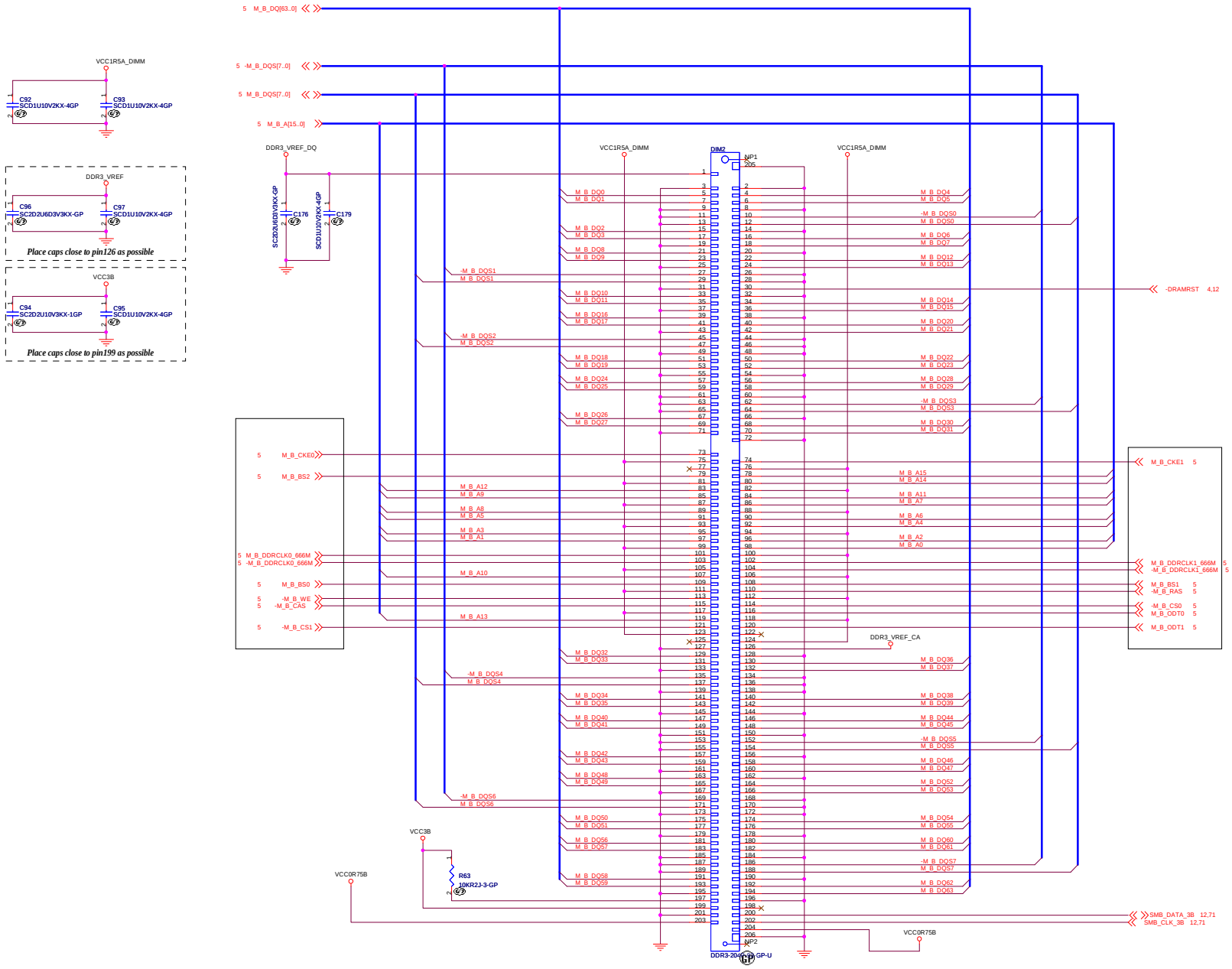

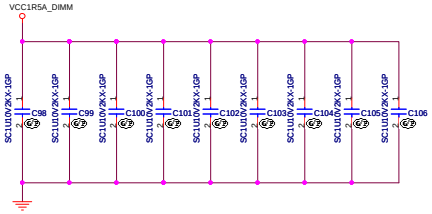

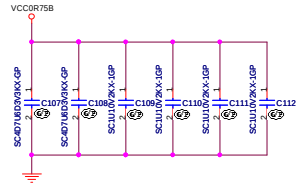

SPD Address : 51h

This connector should be placed on far side from CPU.

<Variant Name>

緯創資通 **Wistron Corporation**
21F, 88, Sec.1, Hsin Tai Wu Rd., Hsichih,
Taipei Hsien 221, Taiwan, R.O.C.

Title: ***DDR3 SODIMM CH-B Primary***

Size	Document Number	Rev
A2	Kendo-3 UMA	SE

Date: Thursday, October 07, 2010 Sheet 13 of 107

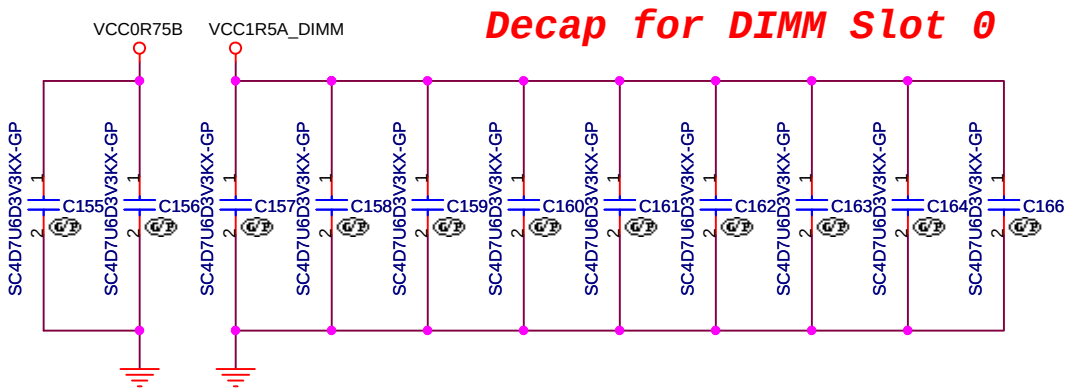

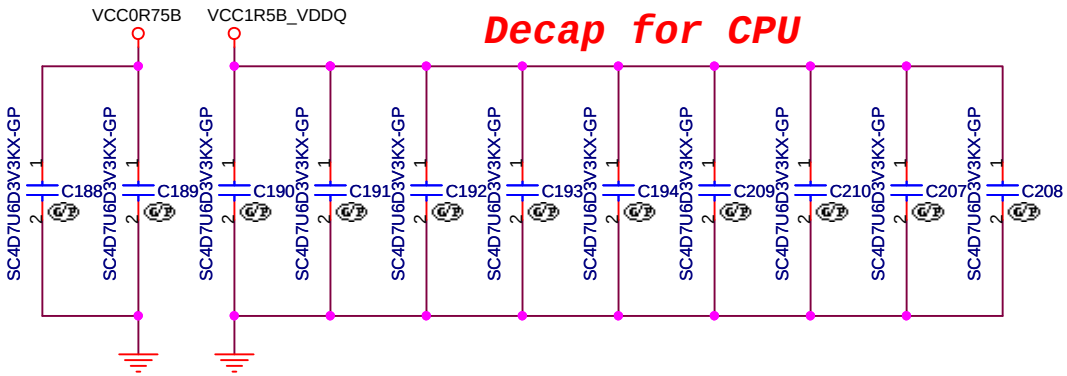

<Variant Name>

緯創資通 **Wistron Corporation**
21F, 88, Sec.1, Hsin Tai Wu Rd., Hsichih,
Taipei Hsien 221, Taiwan, R.O.C.

Title: ***DECAP For DIMMs***

Size	Document Number	Rev
A4	**Kendo-3 UMA**	**SE**

Date: Thursday, October 07, 2010 | Sheet 14 of 107

BLANK

<Core Design>

緯創資通 **Wistron Corporation**
21F, 88, Sec.1, Hsin Tai Wu Rd., Hsichih,
Taipei Hsien 221, Taiwan, R.O.C.

Title	***BLANK***	
Size A4	Document Number **Kendo-3 UMA**	Rev **SE**
Date: Thursday, October 07, 2010	Sheet 15 of 107	

<Core Design>

緯創資通 **Wistron Corporation**
21F, 88, Sec.1, Hsin Tai Wu Rd., Hsichih,
Taipei Hsien 221, Taiwan, R.O.C.

Title	***BLANK***	
Size: A2	Document Number: **Kendo-3 UMA**	Rev: **SE**
Date: Thursday, October 07, 2010	Sheet 16 of 107	

<Core Design>

緯創資通 **Wistron Corporation**
21F, 88, Sec.1, Hsin Tai Wu Rd., Hsichih,
Taipei Hsien 221, Taiwan, R.O.C.

Title	***BLANK***	
Size A4	Document Number **Kendo-3 UMA**	Rev **SE**
Date: Thursday, October 07, 2010	Sheet 17 of 107	

LENOVO CONFIDENTIAL Wistron Taipai to Lenovo Japan

<Core Design>

緯創資通 Wistron Corporation
21F, 88, Sec.1, Hsin Tai Wu Rd., Hsichih,
Taipei Hsien 221, Taiwan, R.O.C.

Title	BLANK	
Size A2	Document Number Kendo-3 UMA	Rev SE
Date: Thursday, October 07, 2010	Sheet 18 of 107	

<Core Design>

緯創資通 **Wistron Corporation**
21F, 88, Sec.1, Hsin Tai Wu Rd., Hsichih,
Taipei Hsien 221, Taiwan, R.O.C.

Title
BLANK

Size	Document Number	Rev
A4	**Kendo-3 UMA**	**SE**

Date: Thursday, October 07, 2010 Sheet 19 of 107

<Core Design>

緯創資通 **Wistron Corporation**
21F, 88, Sec.1, Hsin Tai Wu Rd., Hsichih,
Taipei Hsien 221, Taiwan, R.O.C.

Title
BLANK

Size	Document Number	Rev
A4	**Kendo-3 UMA**	**SE**

Date: Thursday, October 07, 2010 Sheet 20 of 107

<Core Design>

緯創資通 **Wistron Corporation**
21F, 88, Sec.1, Hsin Tai Wu Rd., Hsichih,
Taipei Hsien 221, Taiwan, R.O.C.

Title	***BLANK***	
Size A4	Document Number **Kendo-3 UMA**	Rev **SE**
Date: Thursday, October 07, 2010	Sheet 21 of 107	

<Core Design>

緯創資通 **Wistron Corporation**
21F, 88, Sec.1, Hsin Tai Wu Rd., Hsichih,
Taipei Hsien 221, Taiwan, R.O.C.

Title
BLANK

Size	Document Number	Rev
A4	**Kendo-3 UMA**	**SE**

Date: Thursday, October 07, 2010 Sheet 22 of 107

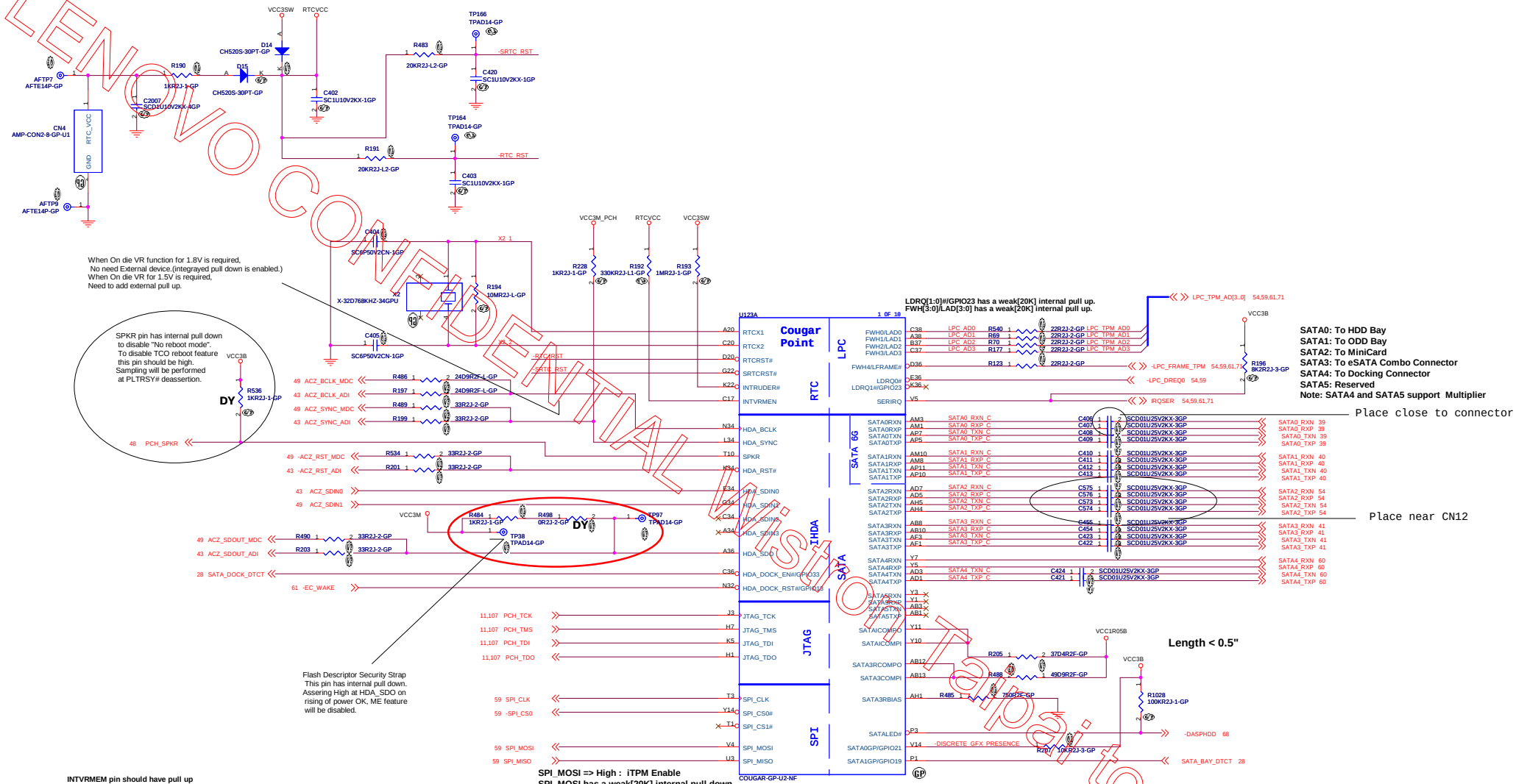

INTVRMEM pin should have pull up resister to enable integrated 1.05V VRM.

HDA_SYNC has a weak[20K] internal pull down.
The pin is low, 1.8V is provided by on die PLL VR.
The pin is high, 1.5V is provided by on die PLL VR.

HDA_BCLK has a weak(20K) internal pull down.

HDA_RST# has a weak(20K) internal pull down.

HDA_SDIN[3:0]has a weak(20K) internal pull down.

SPKR has weak[20K] internal pull down..
If external pull up is applied,
PCH will disable TCO timer system reboot function.

HDA_SDO has a weak[20K] internal pull up.
Low : the Flash Descriptor Security will be overridden.
High : The security measures defined in the Flash descriptor will be in effect.

LENOVO CONFIDENTIAL
Distribution to Lenovo Japan

緯創資通	Wistron Corporation 21F, 88, Sec.1, Hsin Tai Wu Rd., Hsichih, Taipei Hsien 221, Taiwan, R.O.C.	
Title	PCH (1/8):HDA/JTAG/SATA	
Size A2	Document Number Kendo-3 UMA	Rev SE
Date: Thursday, October 07, 2010	Sheet 23 of 107	

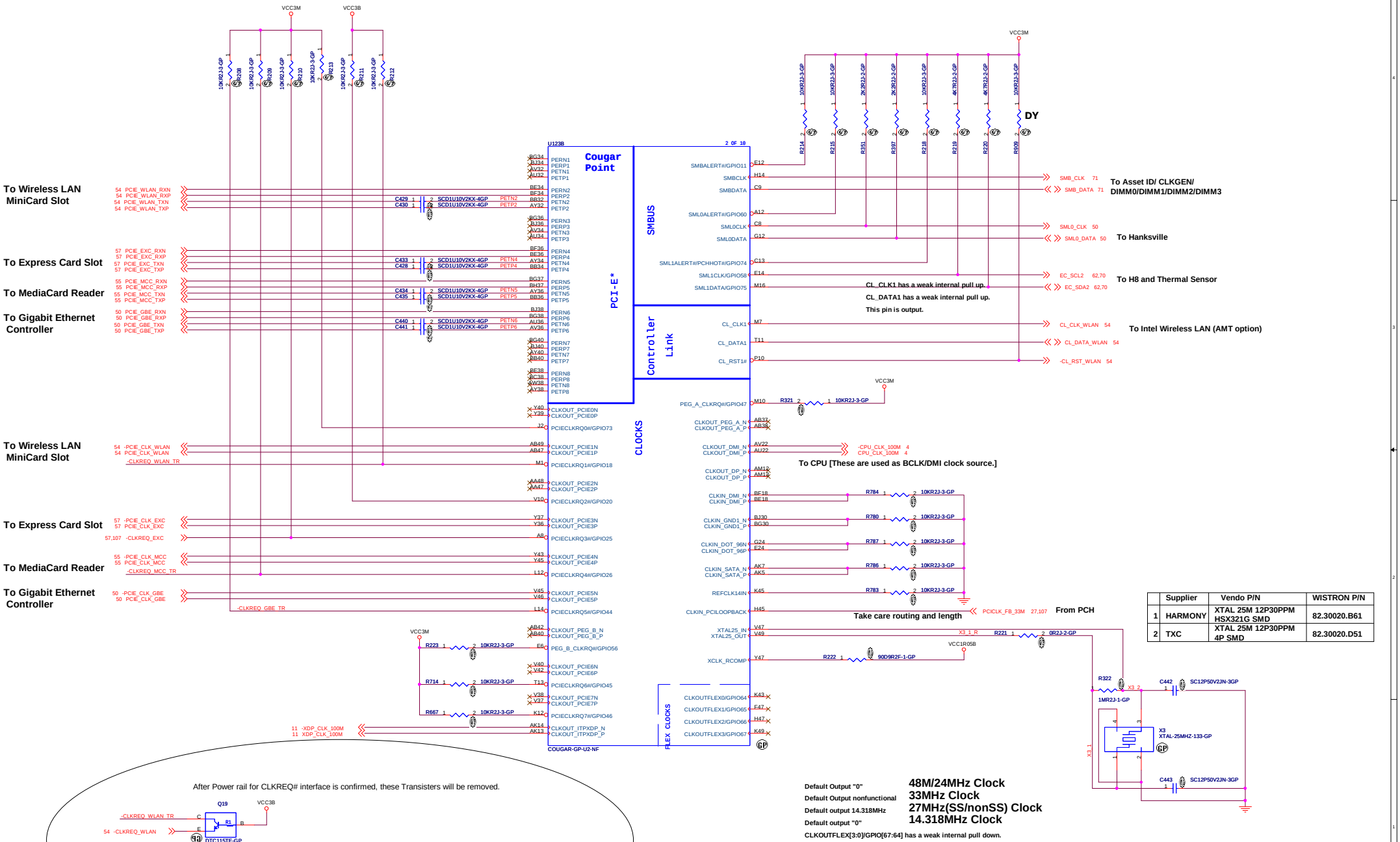

	Supplier	Vendo P/N	WISTRON P/N
1	HARMONY	XTAL 25M 12P30PPM HSX321G SMD	82.30020.B61
2	TXC	XTAL 25M 12P30PPM 4P SMD	82.30020.D51

<Variant Name>

緯創資通 **Wistron Corporation**
21F, 88, Sec.1, Hsin Tai Wu Rd., Hsichih, Taipei Hsien 221, Taiwan, R.O.C.

Title: **PCH(2/8):PCIE/SMBUS/CLK**

Size	Document Number	Rev
A2	Kendo-3 UMA	SE

Date: Thursday, October 07, 2010 Sheet 24 of 107

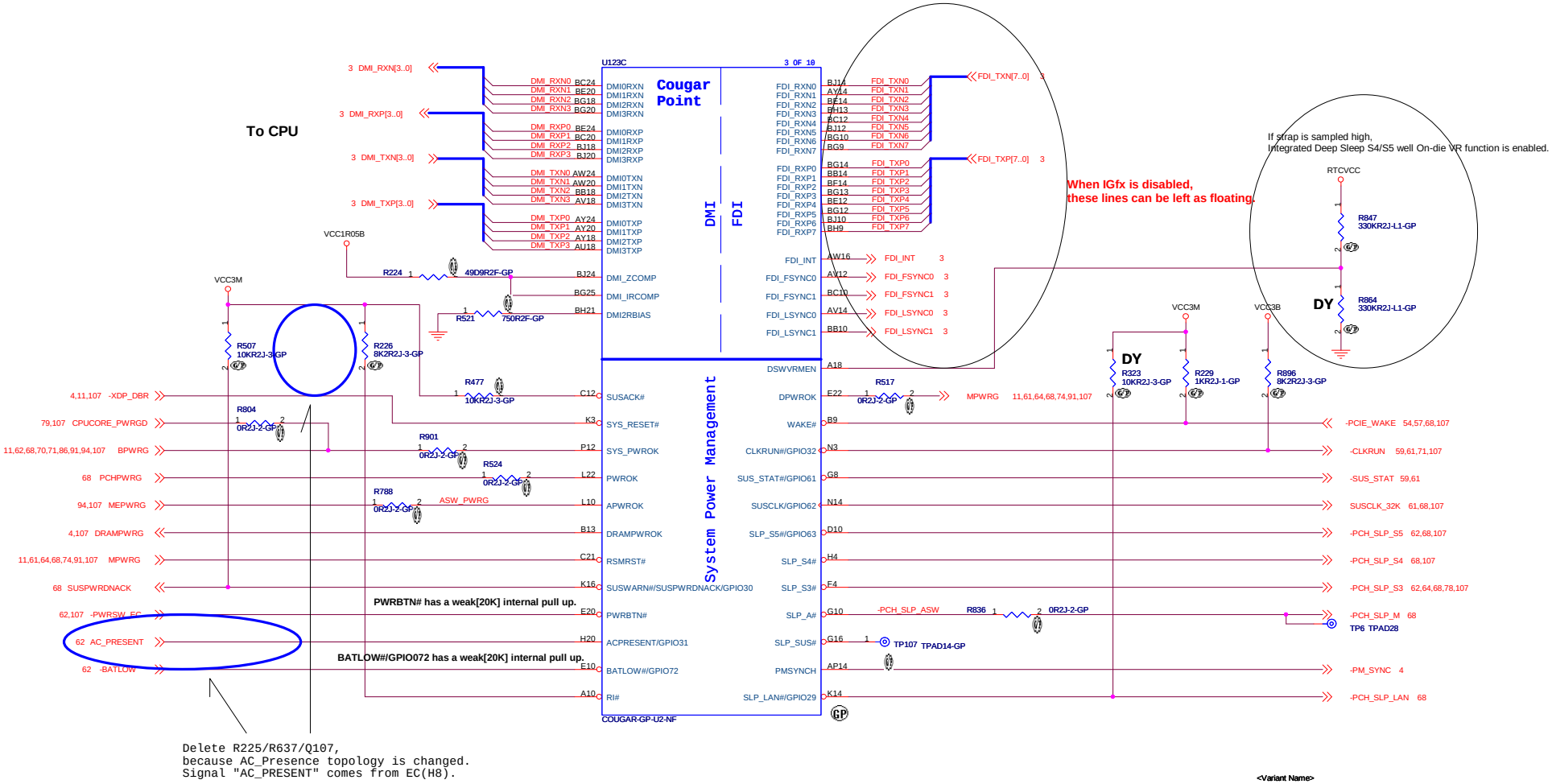

<Variant Name>

緯創資通	**Wistron Corporation** 21F, 88, Sec.1, Hsin Tai Wu Rd., Hsichih, Taipei Hsien 221, Taiwan, R.O.C.
Title	***PCH (3/8):DMI/FDI/PM***
Size: Custom	Document Number: **Kendo-3 UMA**
Rev	SE
Date: Thursday, October 07, 2010	Sheet 25 of 107

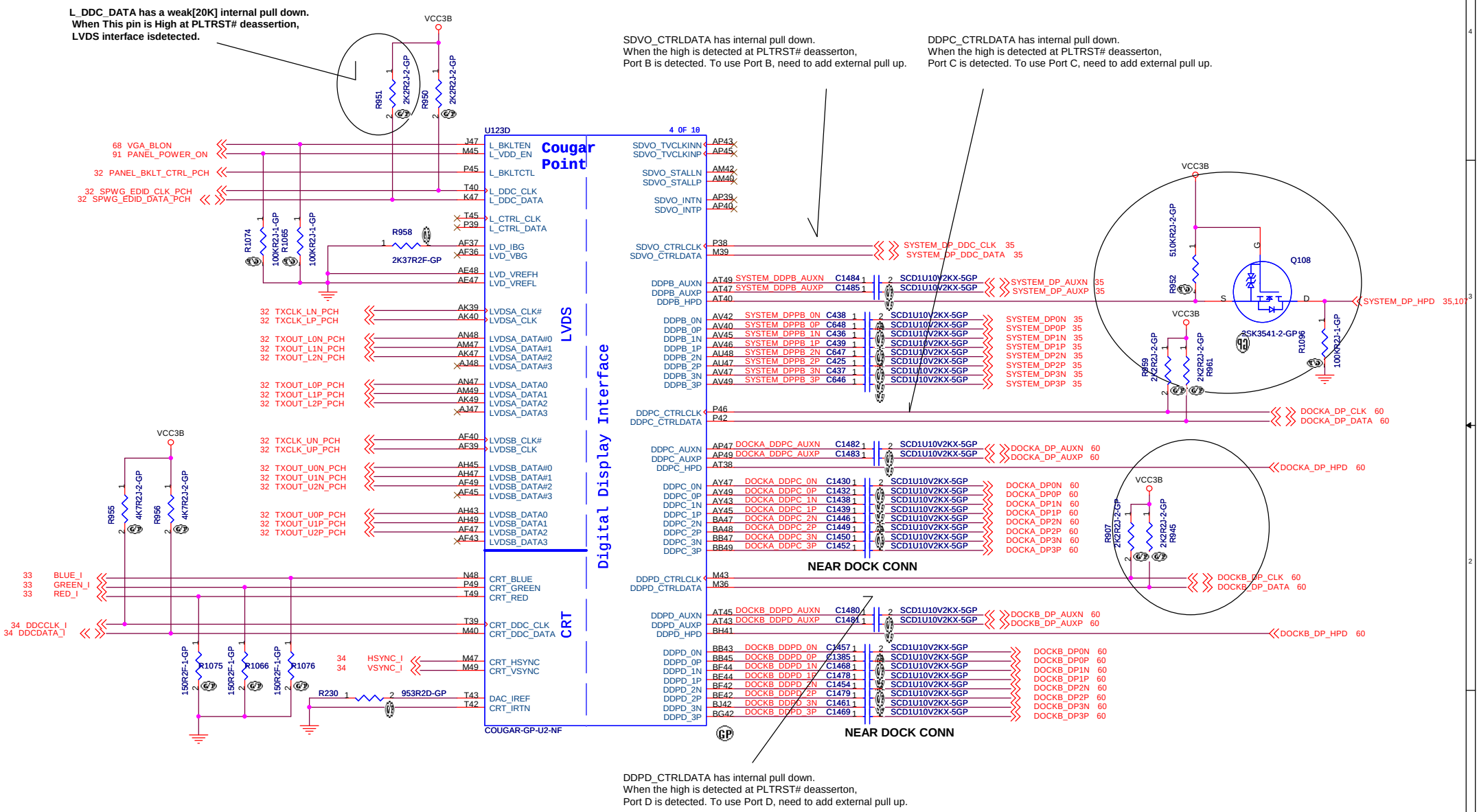

緯創資通	**Wistron Corporation** 21F, 88, Sec.1, Hsin Tai Wu Rd., Hsichih, Taipei Hsien 221, Taiwan, R.O.C.
Title	***PCH (4/8):LVDS/CRT/DDI***
Size A3	Document Number **Kendo-3 UMA** Rev **SE**
Date: Thursday, October 07, 2010	Sheet 26 of 107

Because PCI IF is not used, ADx.C/BEx and GNTx are left as NC.

GNT0# has a weak[20K] internal pull up.
GNT1#/GPIO51 has a weak[20K] internal pull up.
To use SPI IF flash BIOS, GNT1#/GPIO51
and GNT0# should not place external pull down.
GNT2#/GPIO53 has a weak[20K] internal pull up.
This pin should not have external pull down.
GNT3#/GPIO55 has a weak[20K] internal pull up.
If external pull down is applied,
PCH will be "topblock swap" mode.

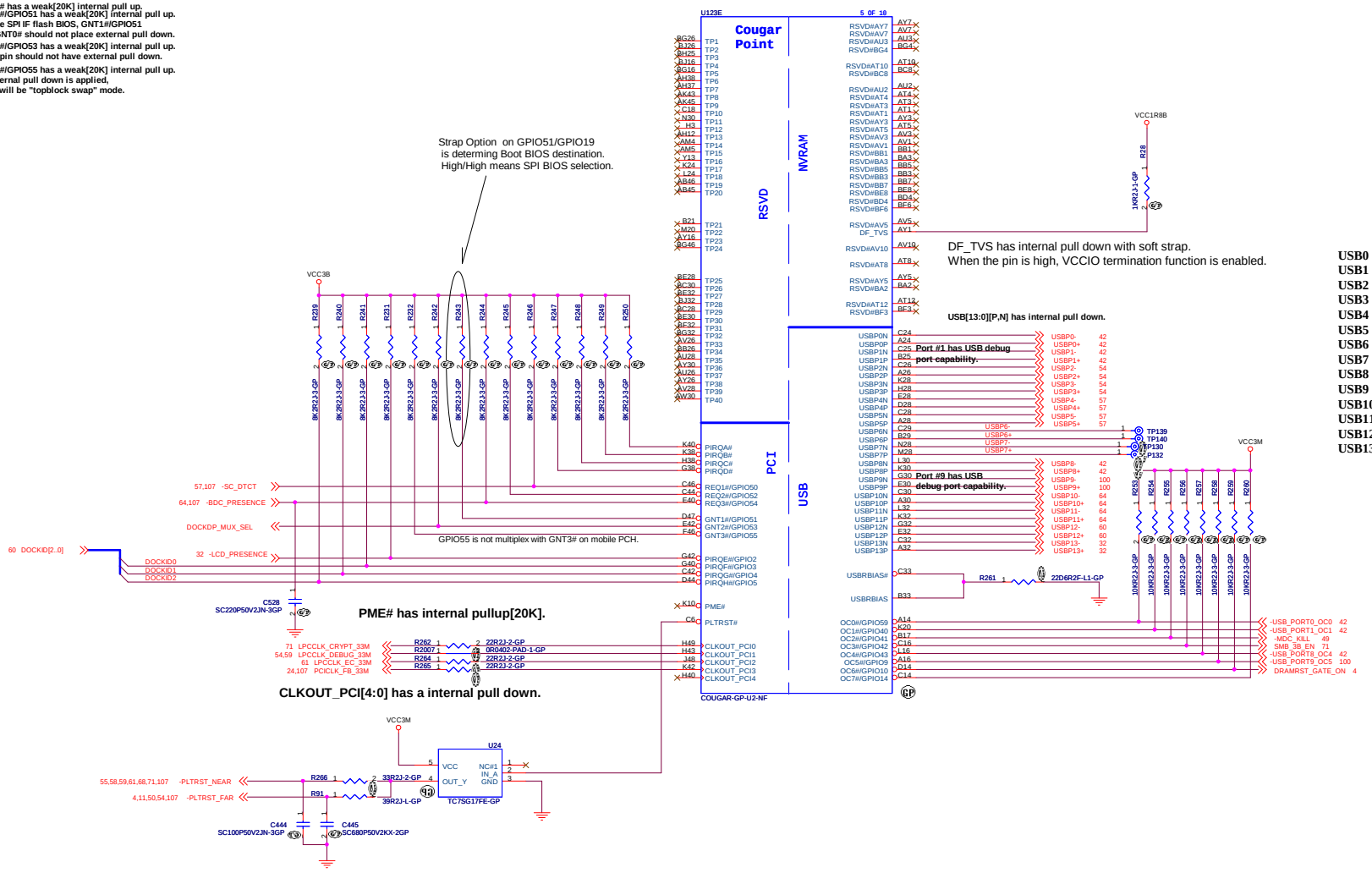

USB0 : To System USB Port (UMA/Dis model)
USB1 : To System onboard USB port(eSATA combo)
USB2 : To WiMAX/WLAN Mini Card Slot
USB3 : To WWAN Mini Card Slot
USB4 : To SmartCard
USB5 : To Express Card Slot
USB6 : Reserved
USB7 : Reserved
USB8 : To System USB Port (UMA/Dis Model)
USB9 : To System Subcard USB port
USB10: To FPR
USB11:To Bluetooth
USB12:To Docking
USB13:To Camera

USBP 0	LEFT DUAL CONN	USB_ON1	-USB_PORT0_OC0
USBP 1	LEFT COMBO CONN	USB_ON1	-USB_PORT1_OC1
USBP 8	LEFT DUAL CONN	USB_ON1	-USB_PORT8_OC4
USBP 9	RIGHT SUB CARD	USB_ON2	-USB_PORT9_OC5

緯創資通 Wistron Corporation
21F, 88, Sec.1, Hsin Tai Wu Rd., Hsichih,
Taipei Hsien 221, Taiwan, R.O.C.

Title: PCH (5/8):PCI/USB/NVM

Size: A2 | Document Number: Kendo-3 UMA | Rev: SE

Date: Thursday, October 07, 2010 | Sheet 27 of 107

When ME TLS confidentialy function is required, External pull up is needed.

When On die PLL function is required,
No need External pull down.
This pin has internal pull up and
power on default is programmed as GPO.
So external pull up will not be needed.

GPIO8 is no longer needed as
a functional strap for integrated clocking.

VRAM ID Bit
High : 1GB
Low : UMA

Ref : High : 1GB on Nozomi3
Low : 512MB on Nozomi3

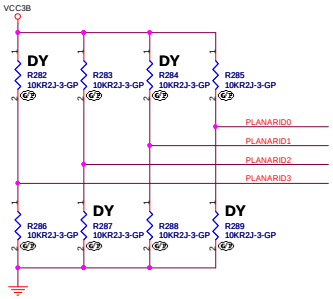

Planar ID table is placed on page 2

<Variant Name>

Wistron Corporation
21F, 88, Sec.1, Hsin Tai Wu Rd., Hsichih,
Taipei Hsien 221, Taiwan, R.O.C.

Title: PCH (7/8):GPIO/NTCF/RSVD

Size: A2 | Document Number: Kendo-3 UMA | Rev: SE

Date: Thursday, October 07, 2010 | Sheet 28 of 107

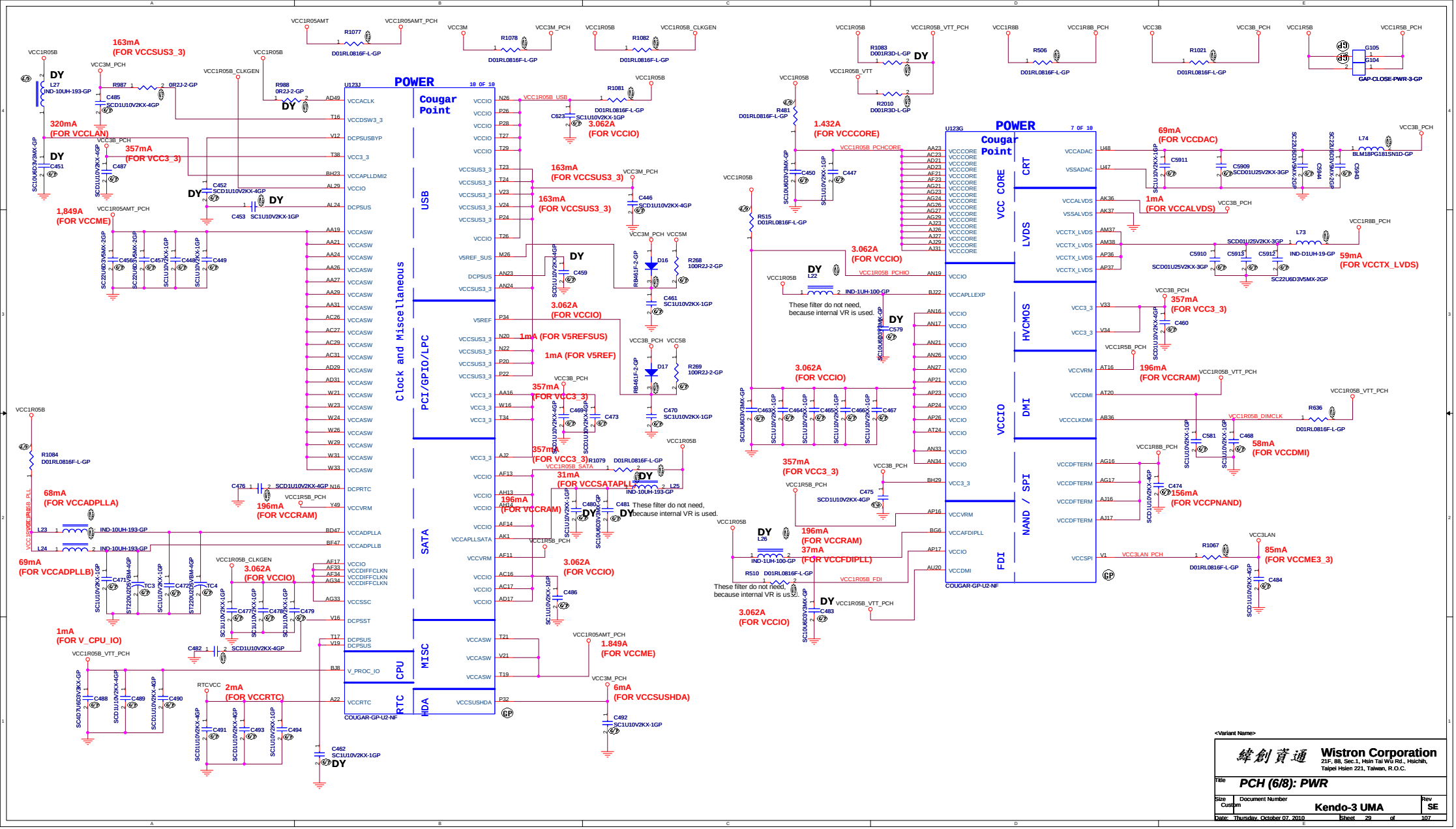
POWER
Cougar Point
U123J
10 OF 10
Clock and Miscellaneous
USB
PCI/GPIO/LPC
SATA
MISC
CPU
RTC
HDA
COUGAR-GP-U2-NF
163mA (FOR VCCSUS3_3)
320mA (FOR VCCLAN)
357mA (FOR VCC3_3)
1,849A (FOR VCCME)
3.062A (FOR VCCIO)
1mA (FOR V5REFSUS)
1mA (FOR V5REF)
31mA (FOR VCCSATAPLL)
196mA (FOR VCCRAM)
68mA (FOR VCCADPLLA)
69mA (FOR VCCADPLLB)
1mA (FOR V_CPU_IO)
2mA (FOR VCCRTC)
6mA (FOR VCCSUSHDA)
These filter do not need, because internal VR is used.
POWER
Cougar Point
U123G
7 OF 10
VCC CORE
VCCIO
CRT
LVDS
HVCMOS
DMI
NAND / SPI
FDI
COUGAR-GP-U2-NF
1.432A (FOR VCCCORE)
69mA (FOR VCCDAC)
1mA (FOR VCCALVDS)
59mA (FOR VCCTX_LVDS)
357mA (FOR VCC3_3)
196mA (FOR VCCRAM)
58mA (FOR VCCDMI)
156mA (FOR VCCPNAND)
85mA (FOR VCCME3_3)
37mA (FOR VCCFDIPLL)
These filter do not need, because internal VR is used.
Wistron Corporation
21F, 88, Sec.1, Hsin Tai Wu Rd., Hsichih, Taipei Hsien 221, Taiwan, R.O.C.
Title
PCH (6/8): PWR
Size Custom
Document Number
Kendo-3 UMA
Rev SE
Date: Thursday, October 07, 2010
Sheet 29 of 107

BLANK

<Variant Name>

緯創資通 Wistron Corporation
21F, 88, Sec.1, Hsin Tai Wu Rd., Hsichih,
Taipei Hsien 221, Taiwan, R.O.C.

Title	BLANK	
Size A3	Document Number Kendo-3 UMA	Rev SE
Date: Thursday, October 07, 2010	Sheet 30 of 107	

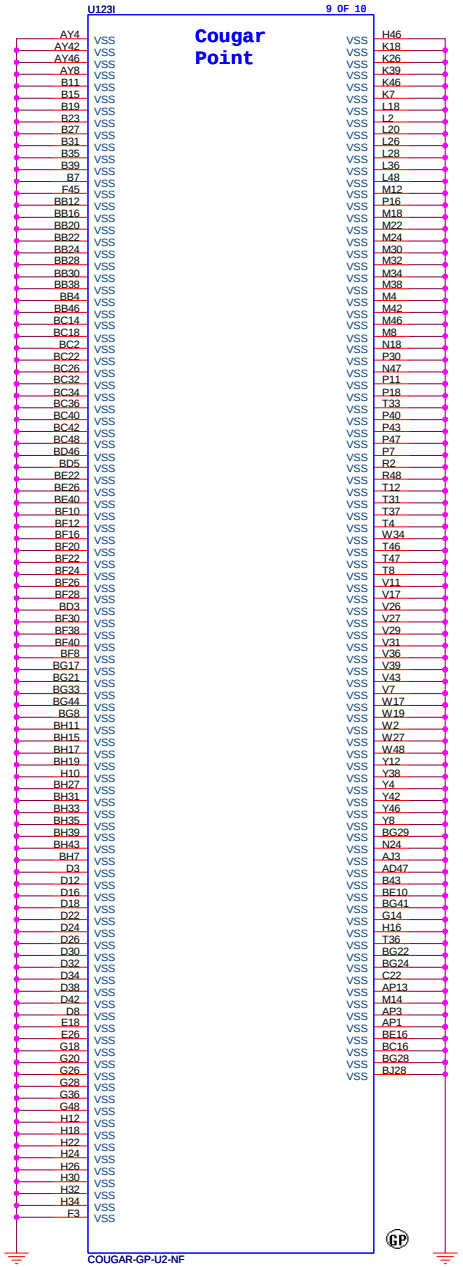

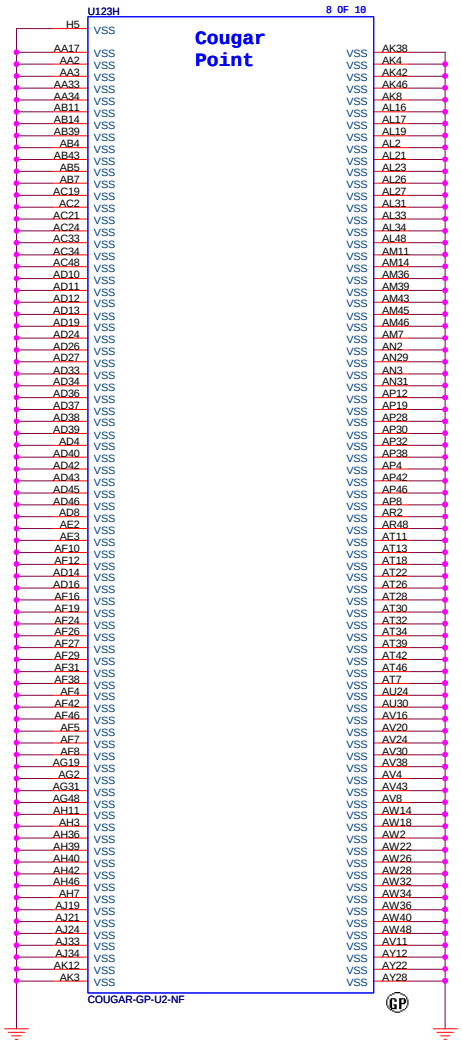

緯創資通 **Wistron Corporation**
21F, 88, Sec.1, Hsin Tai Wu Rd., Hsichih,
Taipei Hsien 221, Taiwan, R.O.C.

Title	***PCH (8/8):GND***	
Size: Custom	Document Number: **Kendo-3 UMA**	Rev: **SE**
Date: Thursday, October 07, 2010	Sheet 31 of 107	

LCD / Inverter Connector

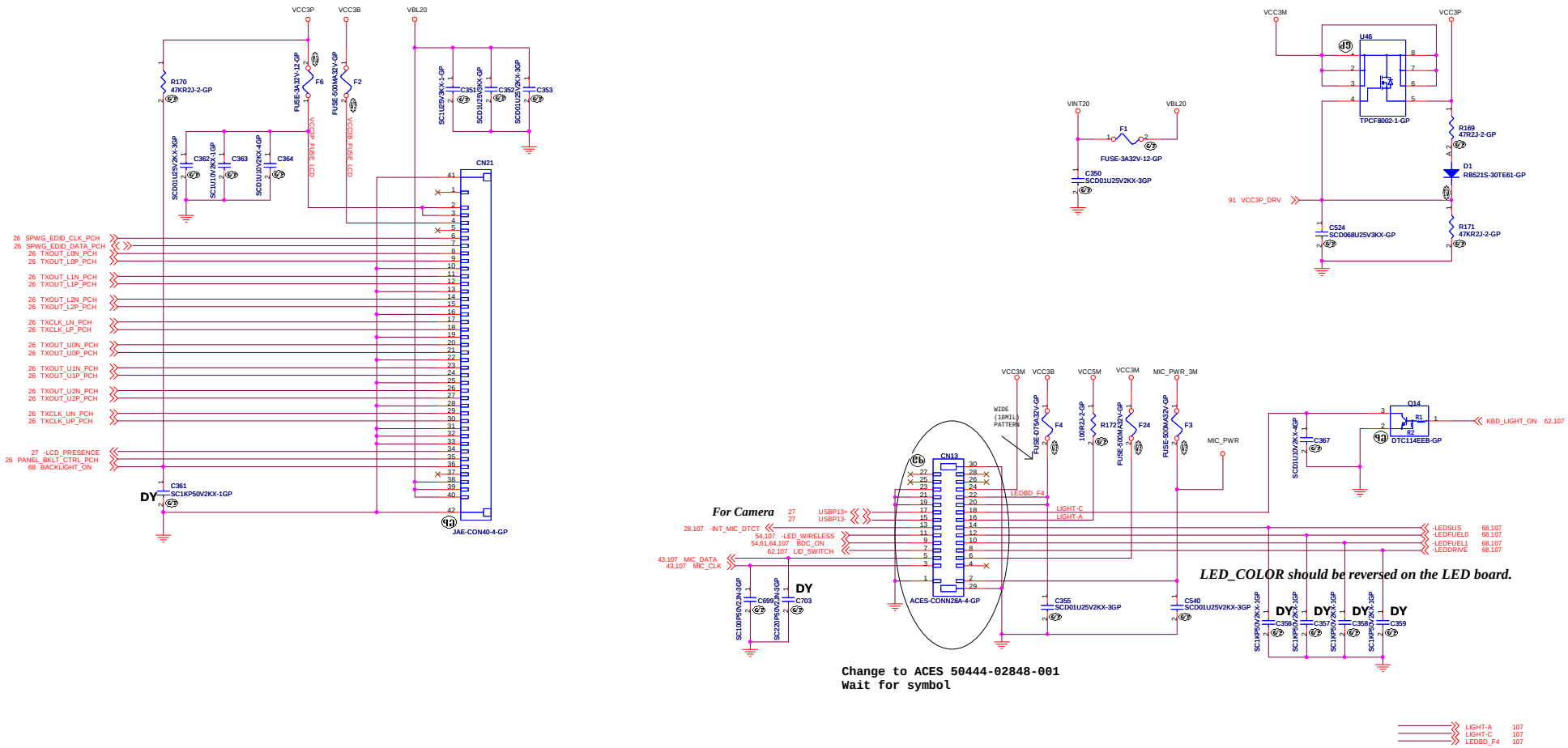

Change to ACES 50444-02848-001
Wait for symbol

<Variant Name>

緯創資通	Wistron Corporation 21F, 88, Sec.1, Hsin Tai Wu Rd., Hsichih, Taipei Hsien 221, Taiwan, R.O.C.	
Title	LCD CONNECTOR	
Size A2	Document Number Kendo-3 UMA	Rev SE
Date: Thursday, October 07, 2010	Sheet 32 of 107	

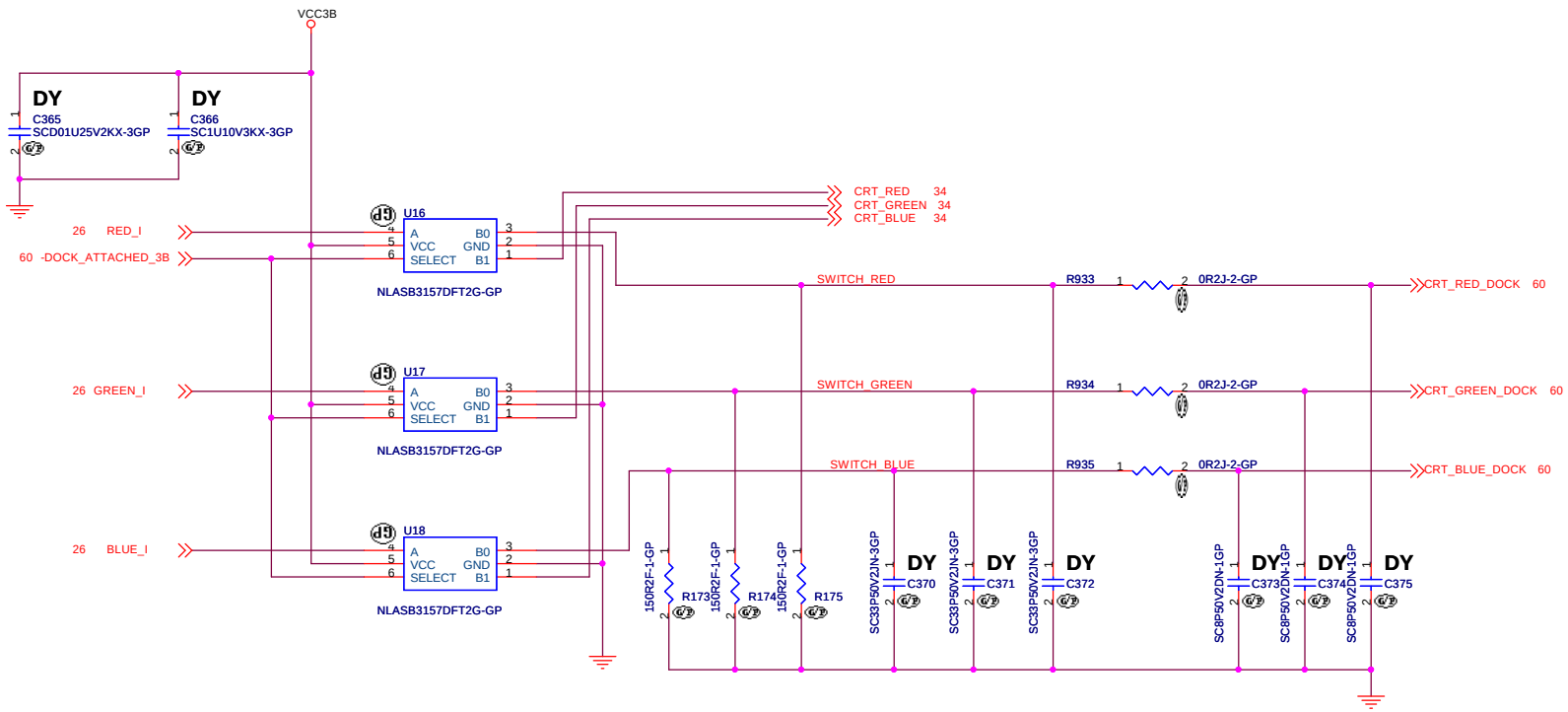

	Supplier	Vendo P/N	WISTRON P/N
1	ONSEMI	NLASB3157DFT2G	54Y9028CA
2	Toshiba	TC7SB3157CFU	73.03157.007
3	TI	74LVC1G3157DCKRE4	54Y9028BA

<Variant Name>

緯創資通 **Wistron Corporation**
21F, 88, Sec.1, Hsin Tai Wu Rd., Hsichih,
Taipei Hsien 221, Taiwan, R.O.C.

Title: ***RGB SWITCH***

Size: A3 | Document Number: **Kendo-3 UMA** | Rev: **SE**

Date: Thursday, October 07, 2010 | Sheet 33 of 107

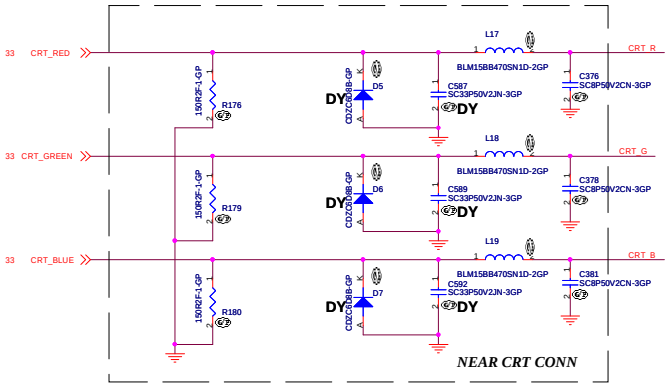

Two pins ESD protection diodes are used for R, G, B, VS, HS, DDC_CLK and DDC_DATA lines. Because if three pins ESD protection diodes are used for them, ESD current will rush to VCCCRT and it breaks a VS/HS buffer.

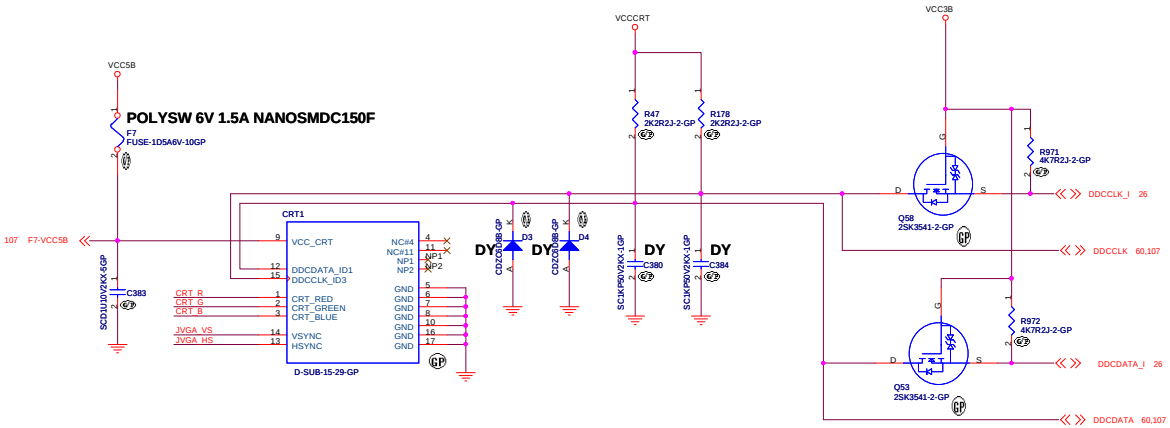

To avoid leak current from a monitor.

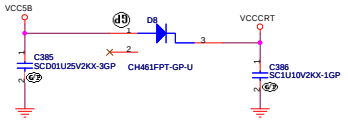

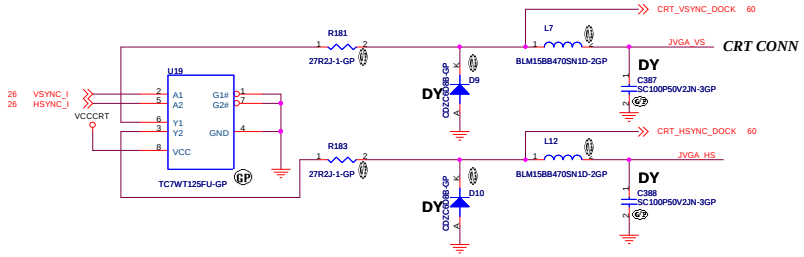

	Supplier	Vendo P/N	WISTRON P/N
1	TOSHIBA	TC7WT125FU-GP	41R0542AA
2	NXP	74HCT2G125DP	73.2G125.A0B

<Variant Name>

緯創資通 Wistron Corporation
21F, 88, Sec.1, Hsin Tai Wu Rd., Hsichih, Taipei Hsien 221, Taiwan, R.O.C.

Title: EXT CRT INTERFACE

Size: A2 | Document Number: Kendo-3 UMA | Rev: SE

Date: Thursday, October 07, 2010 | Sheet 34 of 107

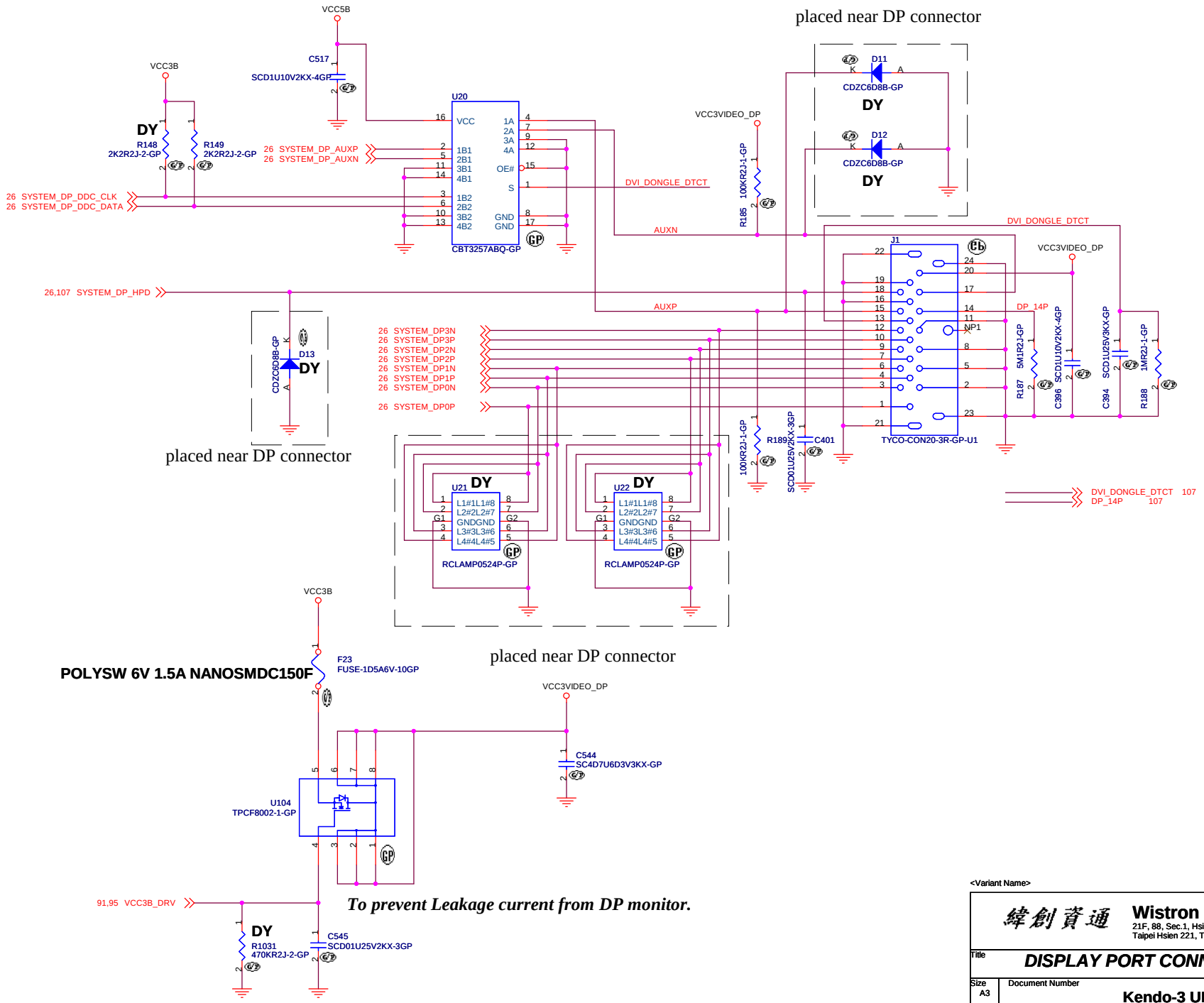

<Variant Name>

緯創資通 **Wistron Corporation**
21F, 88, Sec.1, Hsin Tai Wu Rd., Hsichih,
Taipei Hsien 221, Taiwan, R.O.C.

Title: ***DISPLAY PORT CONNECTOR***

Size	Document Number	Rev
A3	Kendo-3 UMA	SE

Date: Thursday, October 07, 2010 Sheet 35 of 107

<Variant Name>

緯創資通 **Wistron Corporation**
21F, 88, Sec.1, Hsin Tai Wu Rd., Hsichih,
Taipei Hsien 221, Taiwan, R.O.C.

Title

BLANK

Size	Document Number	Rev
A4	**Kendo-3 UMA**	**SE**

Date: Thursday, October 07, 2010 Sheet 36 of 107

<Variant Name>

緯創資通

Wistron Corporation
21F, 88, Sec.1, Hsin Tai Wu Rd., Hsichih,
Taipei Hsien 221, Taiwan, R.O.C.

Title

BLANK

Size	Document Number	Rev
A4	**Kendo-3 UMA**	**SE**

Date: Thursday, October 07, 2010 Sheet 37 of 107

BLANK

<Variant Name>

緯創資通 Wistron Corporation
21F, 88, Sec.1, Hsin Tai Wu Rd., Hsichih,
Taipei Hsien 221, Taiwan, R.O.C.

Title	BLANK	
Size A3	Document Number Kendo-3 UMA	Rev SE
Date: Thursday, October 07, 2010	Sheet 38 of 107	

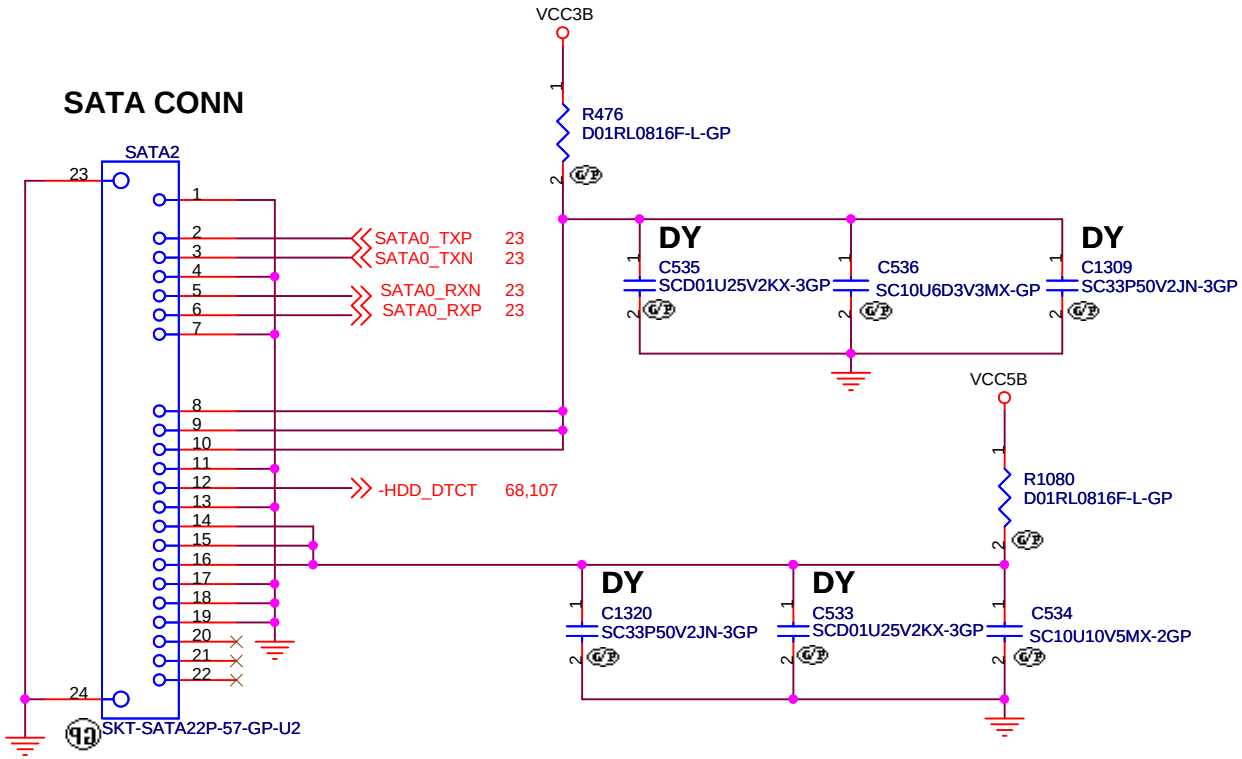

<Variant Name>

緯創資通 **Wistron Corporation**
21F, 88, Sec.1, Hsin Tai Wu Rd., Hsichih,
Taipei Hsien 221, Taiwan, R.O.C.

Title: ***SATA HDD CONN***

Size	Document Number	Rev
A4	**Kendo-3 UMA**	**SE**

Date: Thursday, October 07, 2010 Sheet 39 of 107

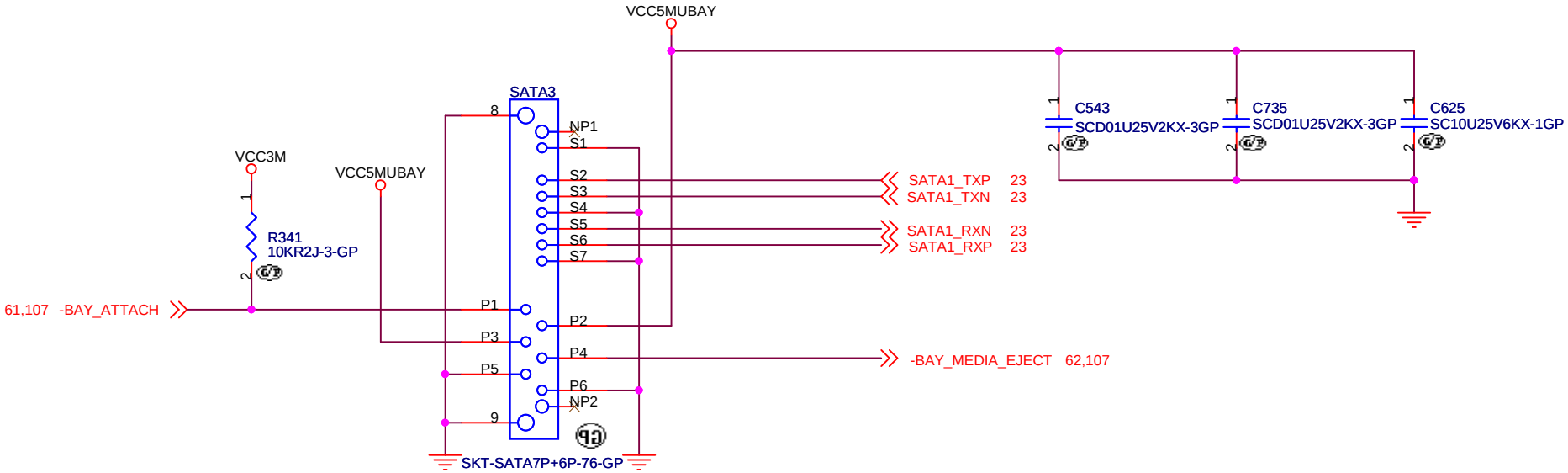

<Variant Name>

緯創資通	**Wistron Corporation** 21F, 88, Sec.1, Hsin Tai Wu Rd., Hsichih, Taipei Hsien 221, Taiwan, R.O.C.
Title	***SATA BAY I/F CONN***
Size A4	Document Number **Kendo-3 UMA** Rev **SE**
Date: Thursday, October 07, 2010	Sheet 40 of 107

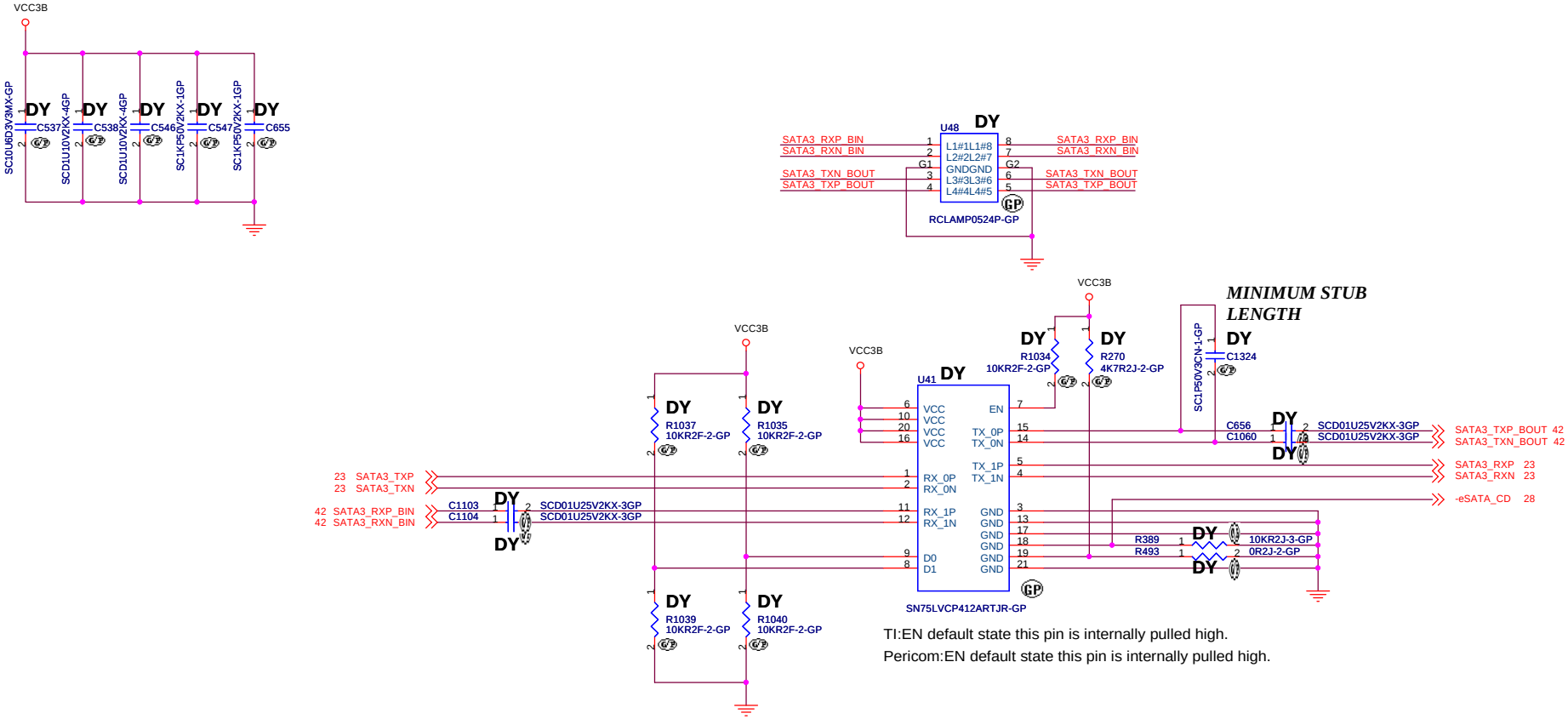

TI:EN default state this pin is internally pulled high.
Pericom:EN default state this pin is internally pulled high.

TABLE

EN	D0	D1	CH - 0	CH - 1
0	X	X	STANDBY	STANDBY
1	0	0	STANDARD	STANDARD
1	1	0	BOOST	STANDARD
1	0	1	STANDARD	BOOST
1	1	1	BOOST	BOOST

LOGIC

		U41	Part Number
1	TI	SN75LVCP412ARTJR-GP	71.75412.A03
2	Pericom	PI3EQX4951STZDEX-GT	71.34951.A03

<Core Design>

緯創資通 **Wistron Corporation**
21F, 88, Sec.1, Hsin Tai Wu Rd., Hsichih, Taipei Hsien 221, Taiwan, R.O.C.

Title: **ESATA CONNECTOR**

Size: A3 | Document Number: **Kendo-3 UMA** | Rev: SE

Date: Thursday, October 07, 2010 | Sheet 41 of 107

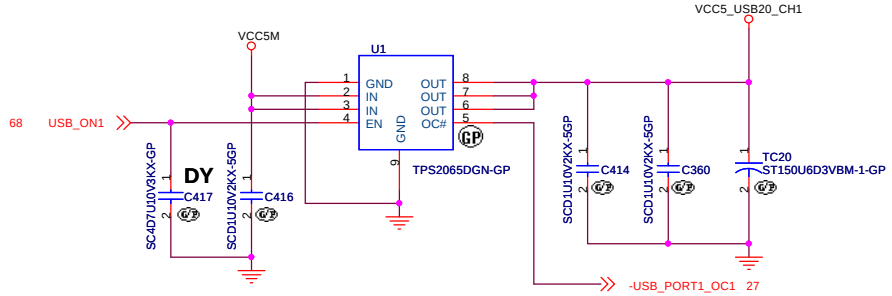

1CH USB Power Switch w/o Output Discharge Function

	Supplier	Vendo P/N	WISTRON P/N
U1	TI	TPS2065DGN-GP	54Y9024BA

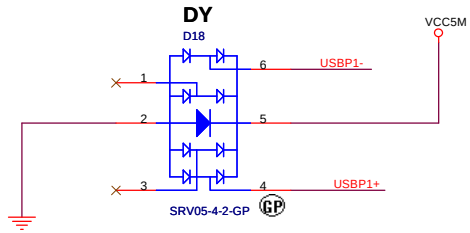

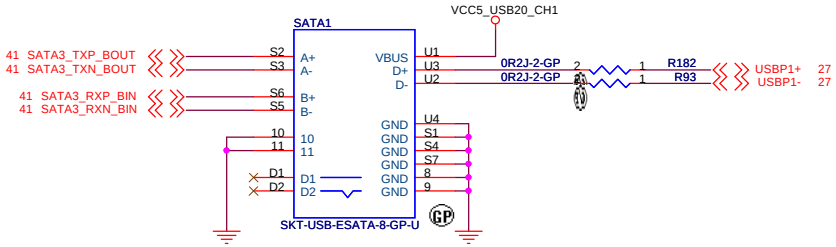

eSATA Combo

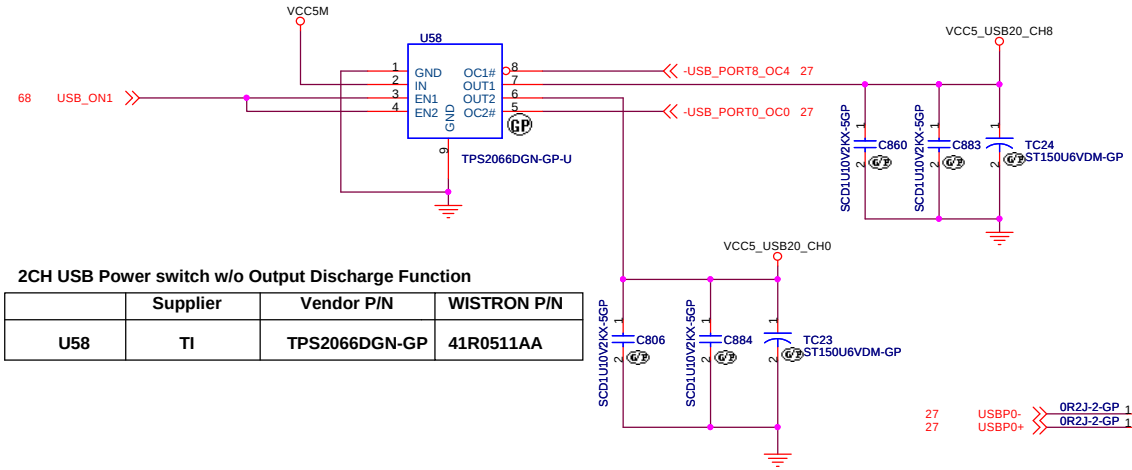

2CH USB Power switch w/o Output Discharge Function

	Supplier	Vendor P/N	WISTRON P/N
U58	TI	TPS2066DGN-GP	41R0511AA

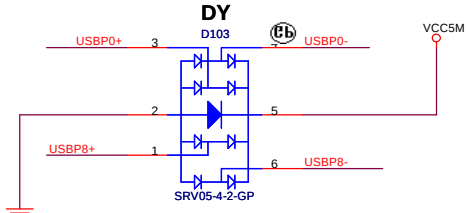

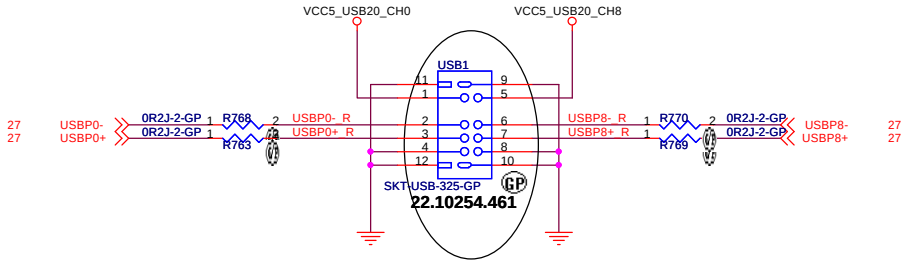

Change to UB111ZC-T2BB4-7H
Wait for symbol

<Variant Name>

緯創資通 **Wistron Corporation**
21F, 88, Sec.1, Hsin Tai Wu Rd., Hsichih,
Taipei Hsien 221, Taiwan, R.O.C.

Title: ***USB POWER/ CONN***

Size	Document Number	Rev
A3	Kendo-3 UMA	SE

Date: Thursday, October 07, 2010 Sheet 42 of 107

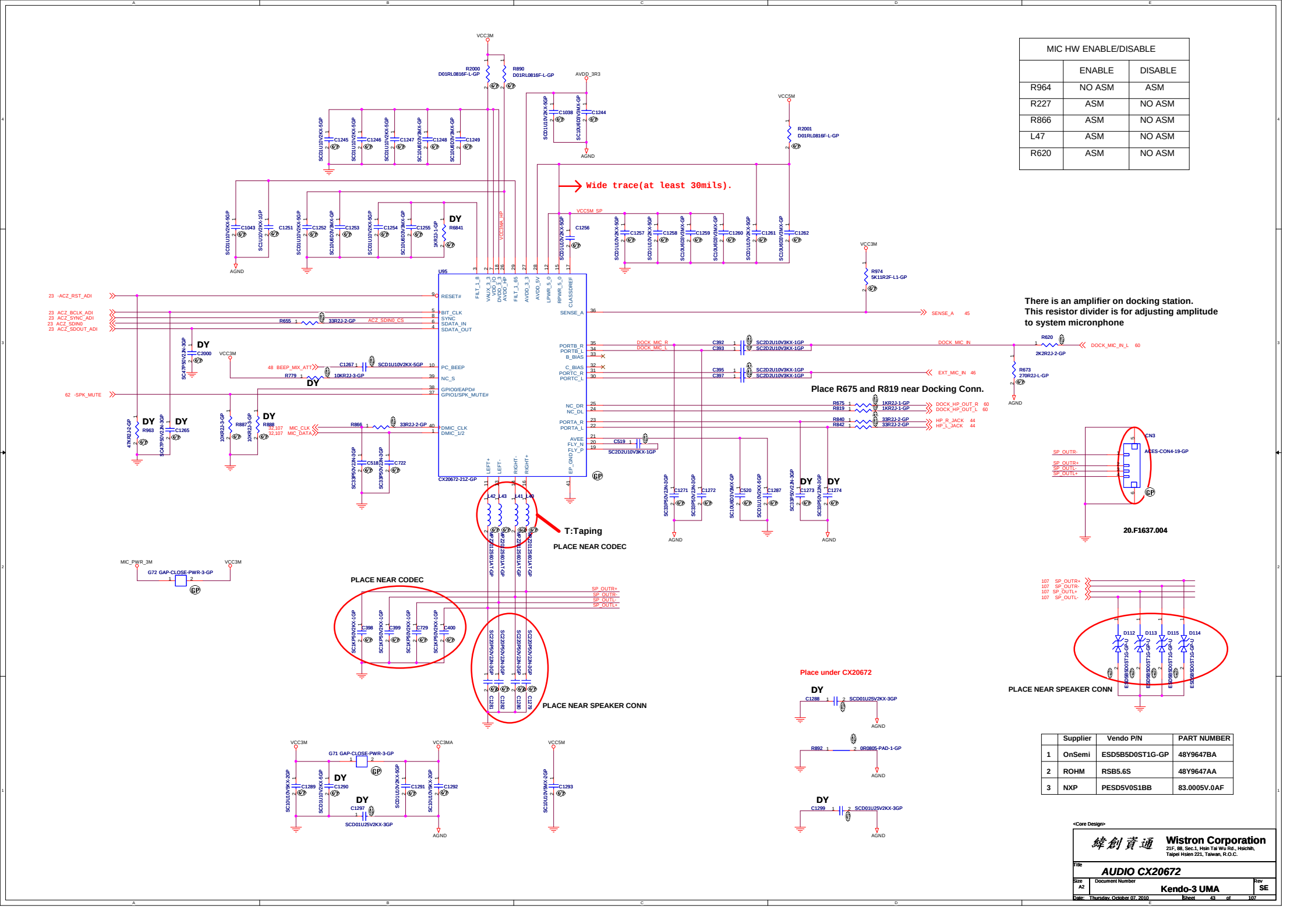

MIC HW ENABLE/DISABLE		
	ENABLE	DISABLE
R964	NO ASM	ASM
R227	ASM	NO ASM
R866	ASM	NO ASM
L47	ASM	NO ASM
R620	ASM	NO ASM

	Supplier	Vendo P/N	PART NUMBER
1	OnSemi	ESD5B5D0ST1G-GP	48Y9647BA
2	ROHM	RSB5.6S	48Y9647AA
3	NXP	PESD5V0S1BB	83.0005V.0AF

<Core Design>

緯創資通 **Wistron Corporation**
21F, 88, Sec.1, Hsin Tai Wu Rd., Hsichih,
Taipei Hsien 221, Taiwan, R.O.C.

Title: ***AUDIO CX20672***

Size: A2 | Document Number: **Kendo-3 UMA** | Rev: **SE**

Date: Thursday, October 07, 2010 | Sheet 43 of 107

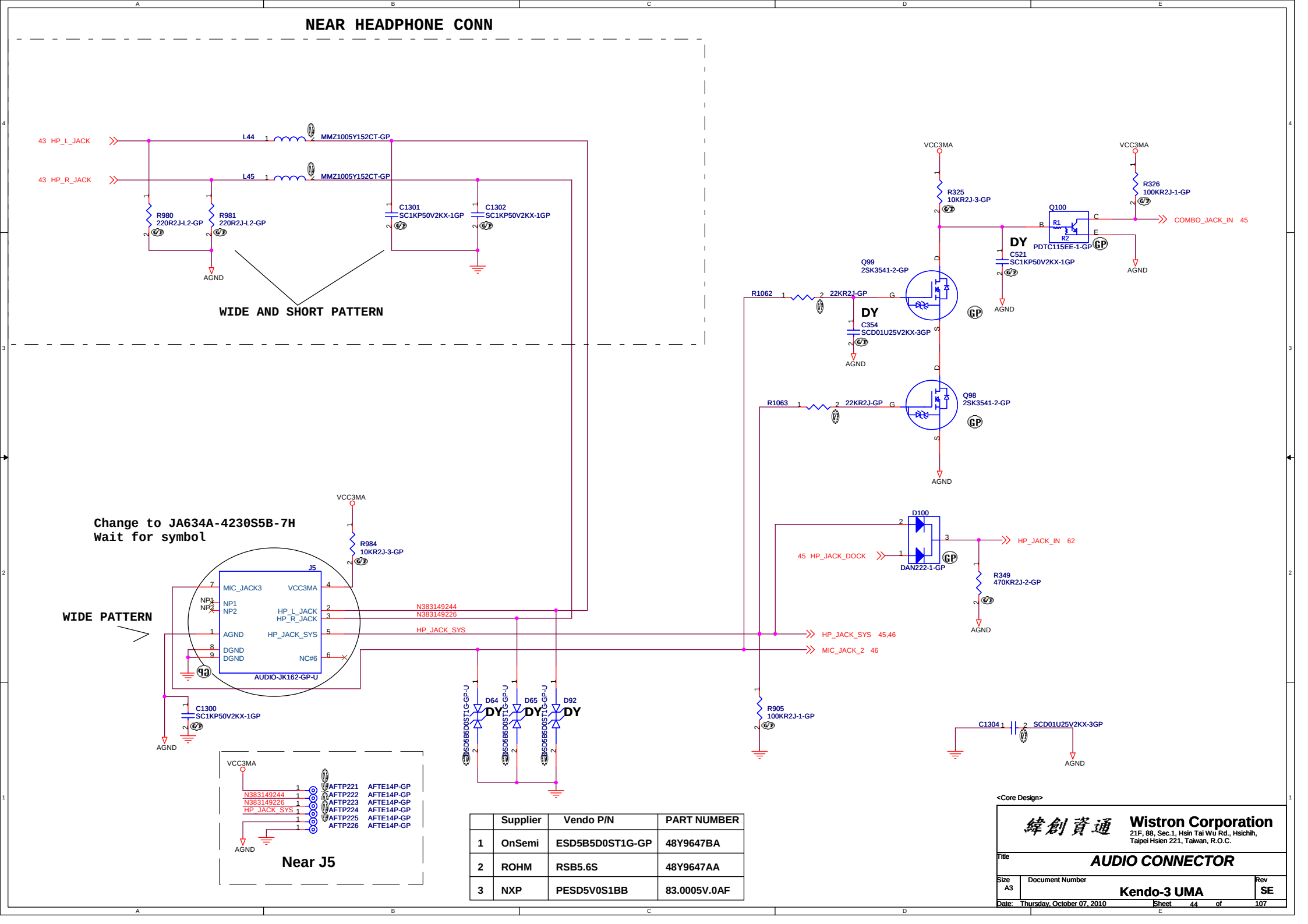

	Supplier	Vendo P/N	PART NUMBER
1	OnSemi	ESD5B5D0ST1G-GP	48Y9647BA
2	ROHM	RSB5.6S	48Y9647AA
3	NXP	PESD5V0S1BB	83.0005V.0AF

<Core Design>

緯創資通 **Wistron Corporation**
21F, 88, Sec.1, Hsin Tai Wu Rd., Hsichih,
Taipei Hsien 221, Taiwan, R.O.C.

Title: ***AUDIO CONNECTOR***

Size: A3 | Document Number: **Kendo-3 UMA** | Rev: SE

Date: Thursday, October 07, 2010 | Sheet 44 of 107

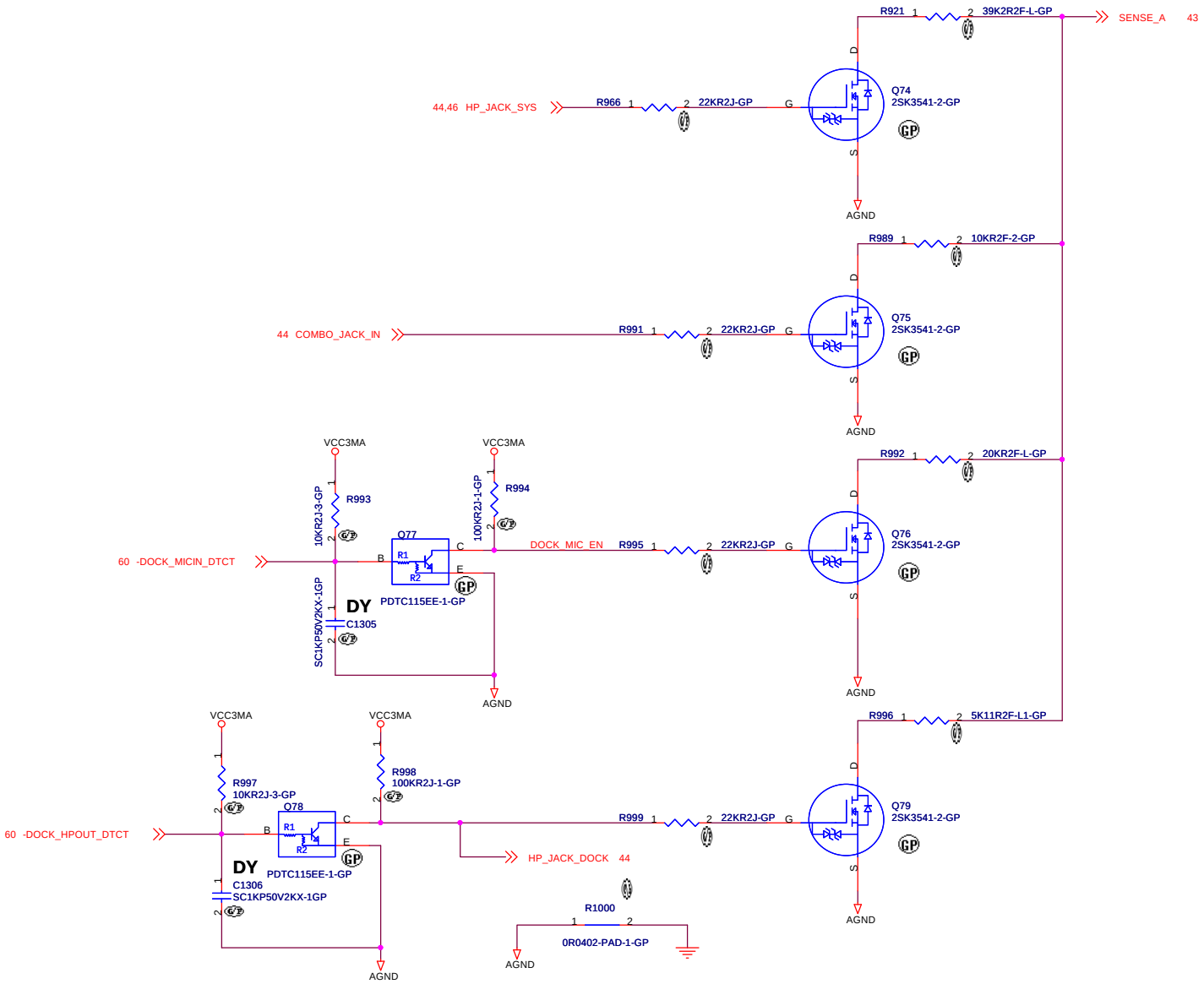

<Core Design>

緯創資通 **Wistron Corporation**
21F, 88, Sec.1, Hsin Tai Wu Rd., Hsichih,
Taipei Hsien 221, Taiwan, R.O.C.

Title: ***AUDIO JACK SENSE***

Size	Document Number	Rev
A3	Kendo-3 UMA	SE

Date: Thursday, October 07, 2010 Sheet 45 of 107

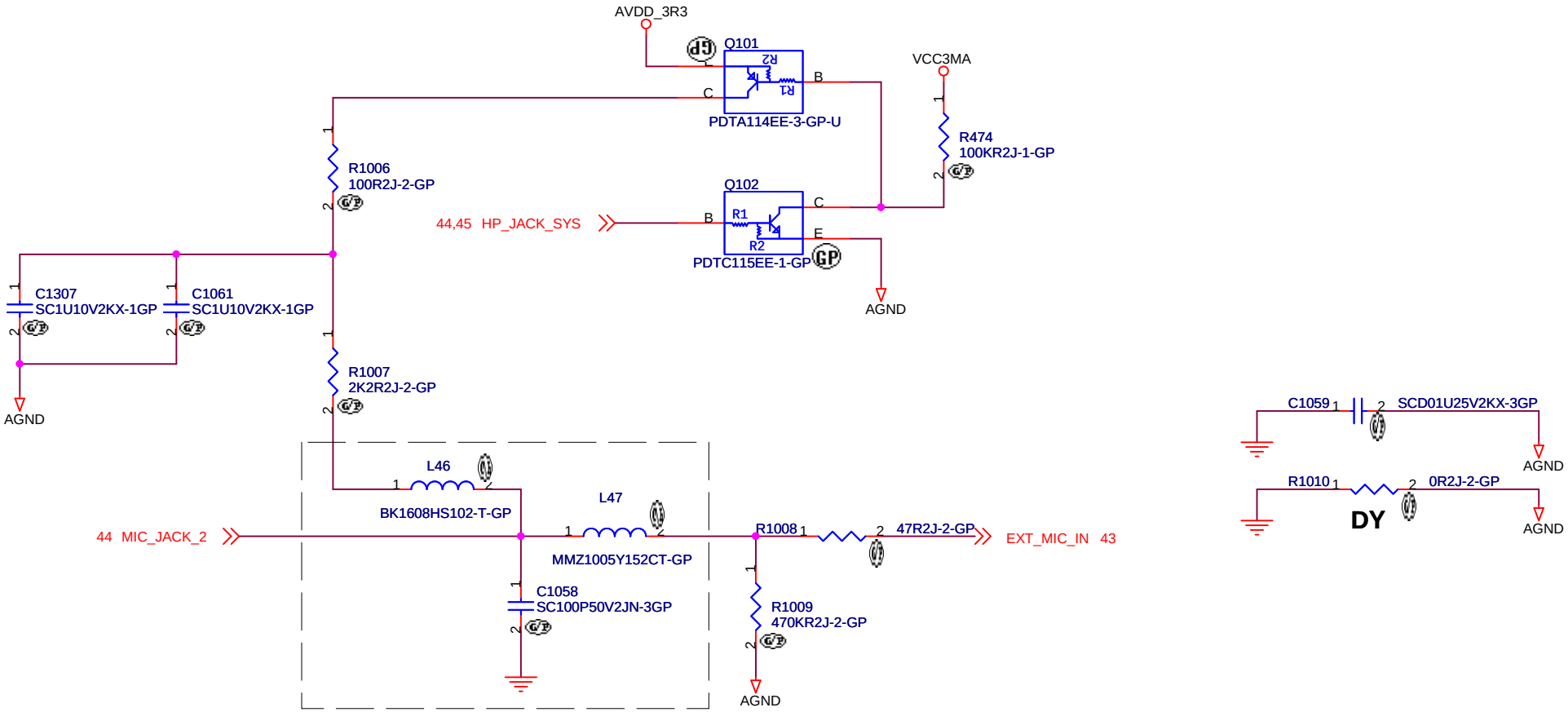

NEAR EXT MIC CONN

<Core Design>

緯創資通 **Wistron Corporation**
21F, 88, Sec.1, Hsin Tai Wu Rd., Hsichih,
Taipei Hsien 221, Taiwan, R.O.C.

Title: ***AUDIO EXT MIC I/F***

Size	Document Number	Rev
A4	**Kendo-3 UMA**	**SE**

Date: Thursday, October 07, 2010 Sheet 46 of 107

BLANK

<Variant Name>

緯創資通 Wistron Corporation
21F, 88, Sec.1, Hsin Tai Wu Rd., Hsichih,
Taipei Hsien 221, Taiwan, R.O.C.

Title	BLANK	
Size A3	Document Number Kendo-3 UMA	Rev SE
Date: Thursday, October 07, 2010	Sheet 47 of 107	

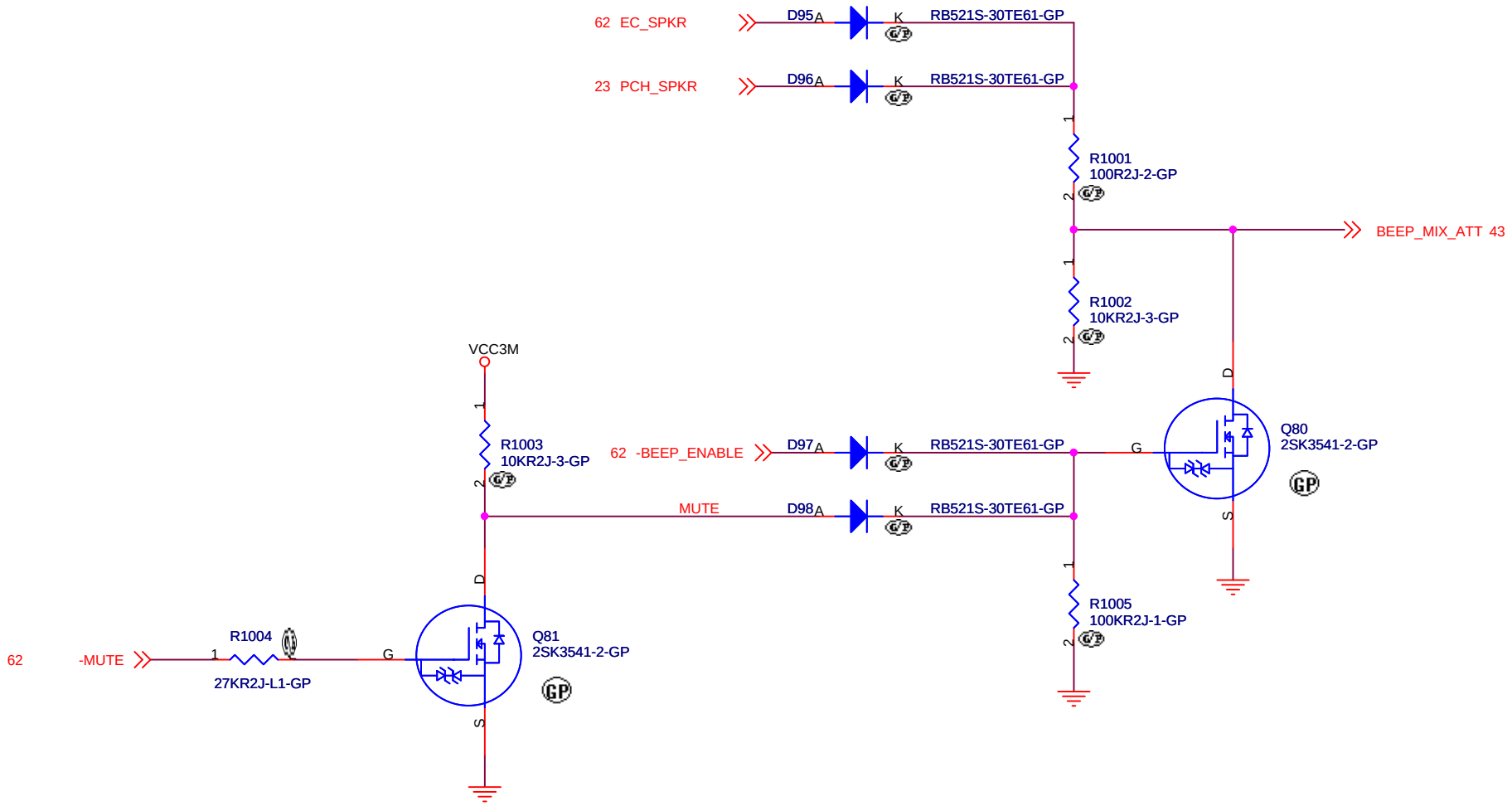

<Core Design>

緯創資通 **Wistron Corporation**
21F, 88, Sec.1, Hsin Tai Wu Rd., Hsichih,
Taipei Hsien 221, Taiwan, R.O.C.

Title
BEEP CONTROL

Size	Document Number	Rev
A4	**Kendo-3 UMA**	**SE**

Date: Thursday, October 07, 2010 Sheet 48 of 107

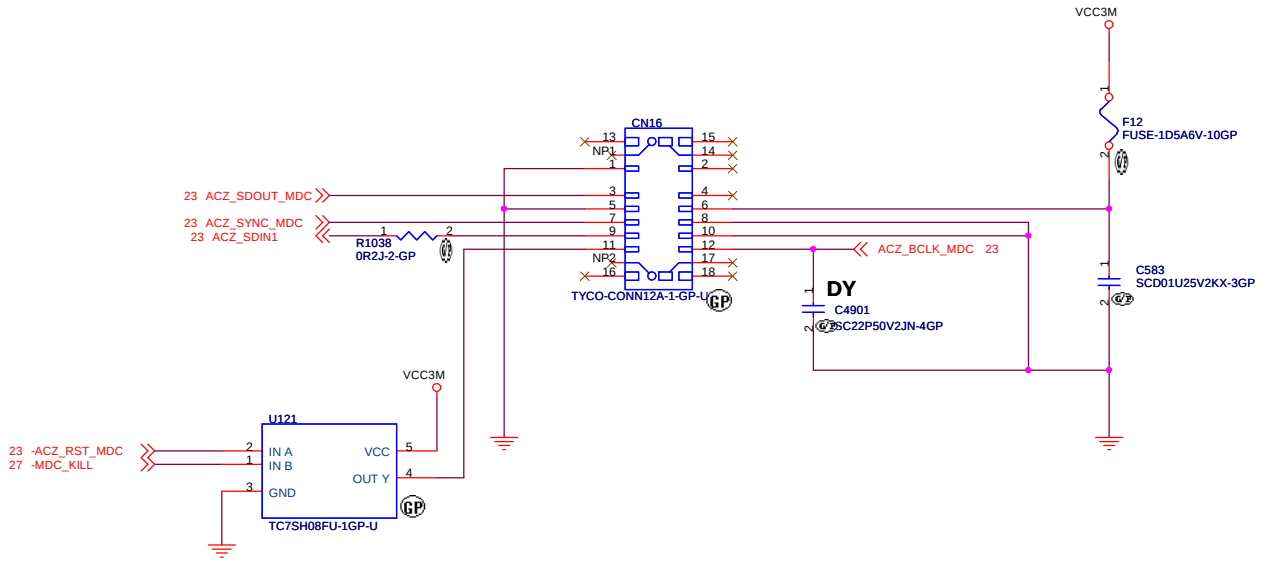

<Variant Name>

緯創資通 **Wistron Corporation**
21F, 88, Sec.1, Hsin Tai Wu Rd., Hsichih,
Taipei Hsien 221, Taiwan, R.O.C.

Title: ***MDC CONNECTOR***

Size	Document Number	Rev
A3	Kendo-3 UMA	SE

Date: Thursday, October 07, 2010 Sheet 49 of 107

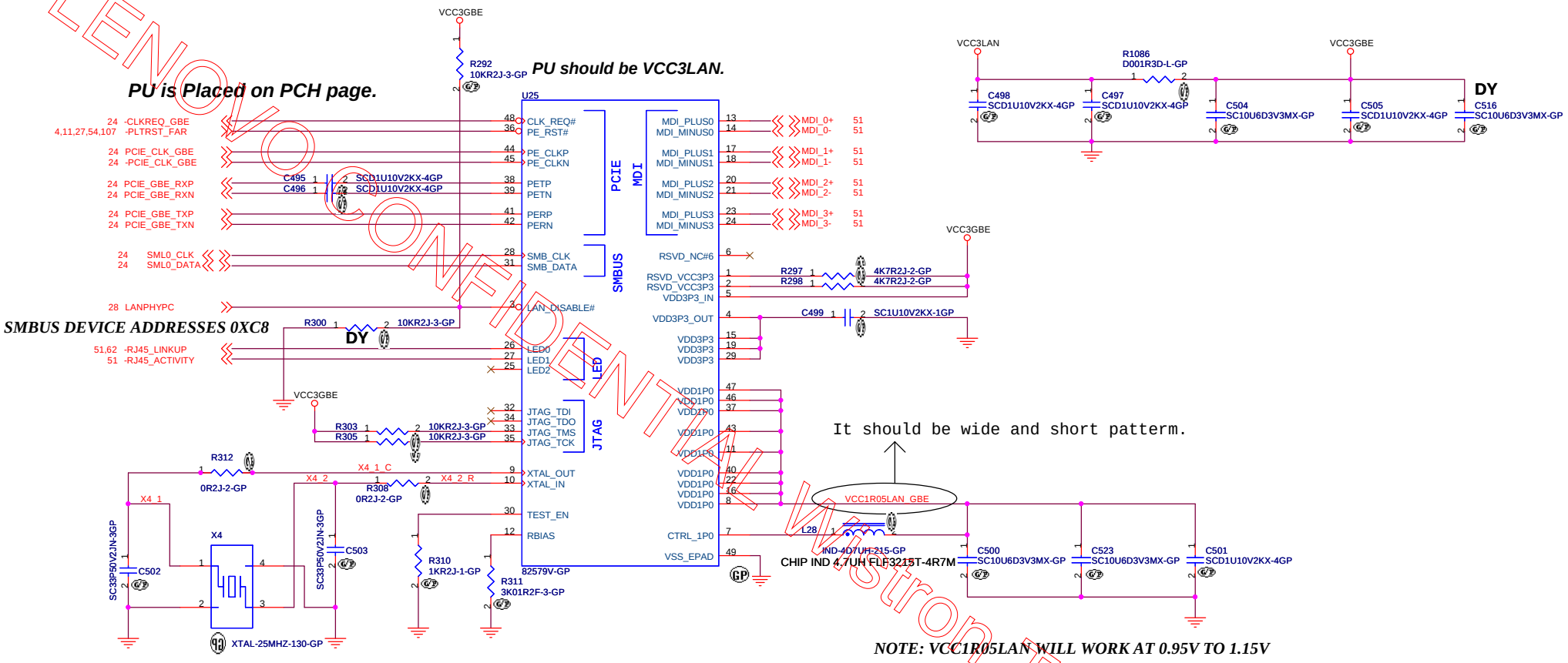

	Supplier	Vendo P/N	WISTRON P/N
1	HARMONY	XTAL 25M 18P30PPM HSX321G SMD	82.30020.B21
2	TXC	XTAL 25M 18P30PPM 4P SMD	82.30020.D21

KDS Recommended Conditions:
Normal Frequency: 25MHz.
Frequency Tolerance: +/- 30ppm.
Load Frequency: 18pF.
Effective Series Resistance: 50-ohm.
Effective Shunt Capacitancce: 2pF.

HELE Recommended Conditions:
Normal Frequency: 25MHz.
Frequency Tolerance: +/- 30ppm.
Load Frequency: 18pF.
Effective Series Resistance: 50-ohm.
Effective Shunt Capacitancce: 2pF.

Intel Recommended Conditions:
Normal Frequency: 25MHz.
Frequency Tolerance: +/- 30ppm.
Load Frequency: 18pF.
Effective Series Resistance: 50-ohm.
Effective Shunt Capacitancce: 6pF.

LENOVO CONFIDENTIAL Wistron Taipai to Lenovo Taipai

<Variant Name>

緯創資通 Wistron Corporation
21F, 88, Sec.1, Hsin Tai Wu Rd., Hsichih,
Taipei Hsien 221, Taiwan, R.O.C.

Title: GBE HANKSVILLE

Size: A3 | Document Number: Kendo-3 UMA | Rev: SE

Date: Thursday, October 07, 2010 | Sheet 50 of 107

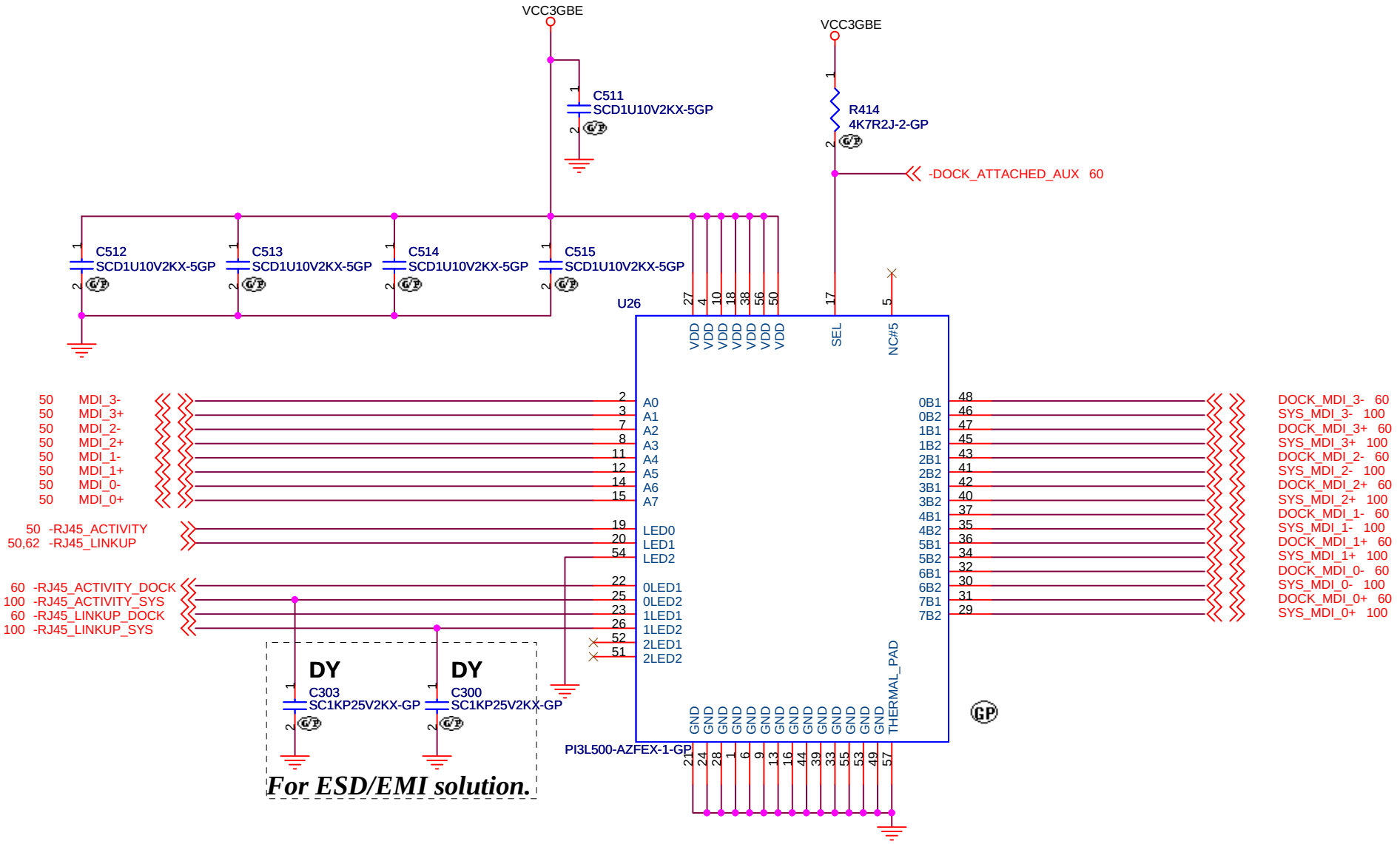

[Source Cadidate]				
1st	Pericom	PI3L500AZFEX	73.3L500.003	41R0539AA
2nd	TI	TS3L500AERHUR	73.3L500.A0V	41R0539BA
3rd	ONSEMI	NS3L500MTTWG	73.03500.003	

<Variant Name>

緯創資通 **Wistron Corporation**
21F, 88, Sec.1, Hsin Tai Wu Rd., Hsichih,
Taipei Hsien 221, Taiwan, R.O.C.

Title: ***GBE LAN SW***

Size	Document Number	Rev
A4	**Kendo-3 UMA**	SE

Date: Thursday, October 07, 2010 Sheet 51 of 107

BLANK

<Variant Name>

緯創資通 **Wistron Corporation**
21F, 88, Sec.1, Hsin Tai Wu Rd., Hsichih,
Taipei Hsien 221, Taiwan, R.O.C.

Title	***BLANK***	
Size A4	Document Number **Kendo-3 UMA**	Rev **SE**
Date: Thursday, October 07, 2010	Sheet 52 of 107	

BLANK

<Variant Name>

緯創資通 Wistron Corporation
21F, 88, Sec.1, Hsin Tai Wu Rd., Hsichih,
Taipei Hsien 221, Taiwan, R.O.C.

Title	BLANK	
Size A4	Document Number Kendo-3 UMA	Rev SE
Date: Thursday, October 07, 2010	Sheet 53 of 107	

WIRELESS DISABLE SWITCH

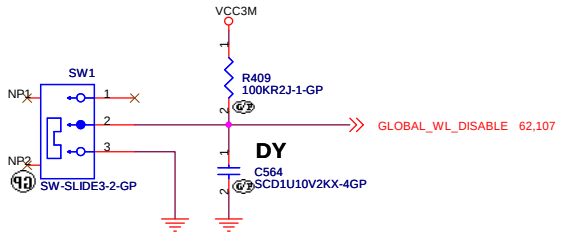

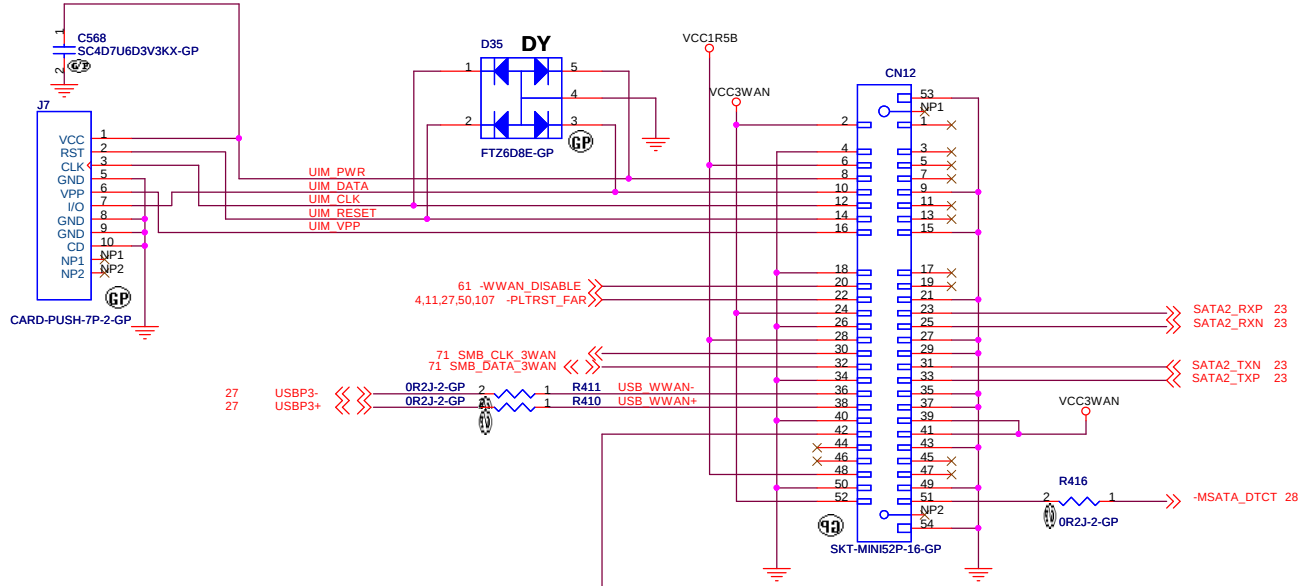

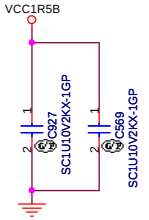

On WWAN Always on regular mode,
This component have to be assembled,
instead of above D+/D- jumper.

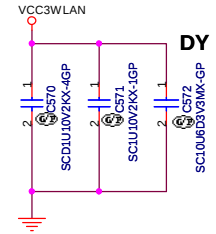

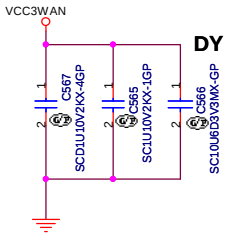

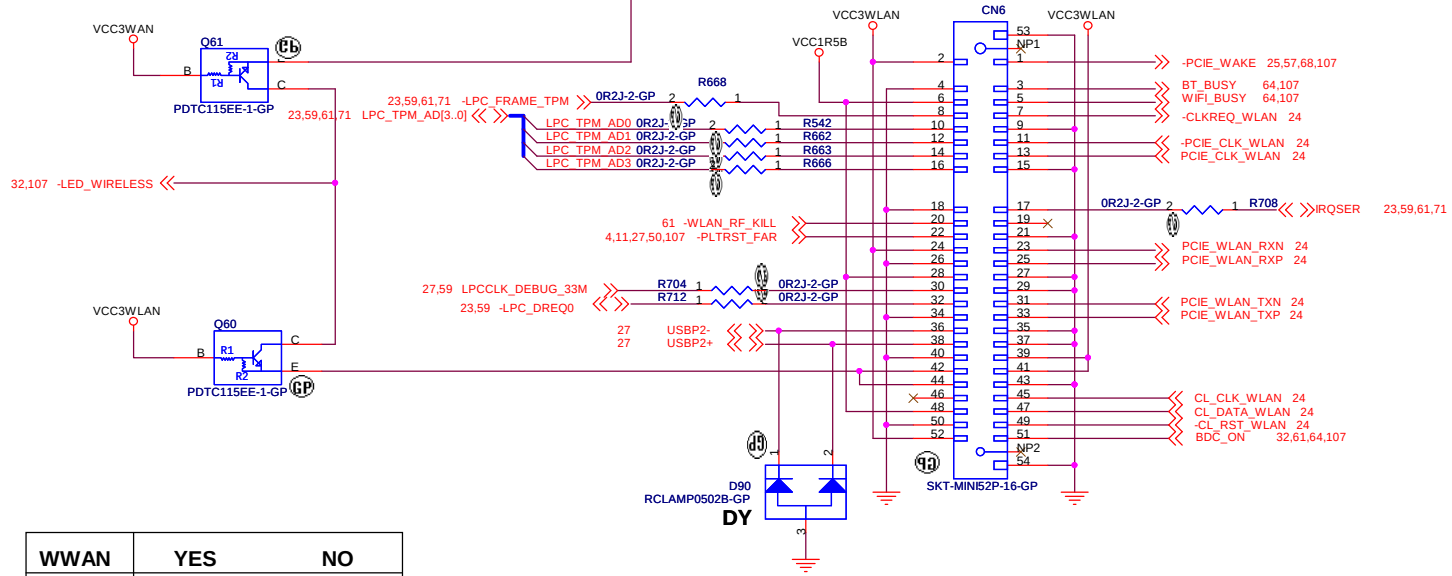

WWAN	YES	NO
CN12	ASM	NO ASM
J7	ASM	NO ASM
C567	ASM	NO ASM
C565	ASM	NO ASM
C568	ASM	NO ASM

<Variant Name>

緯創資通 Wistron Corporation
21F, 88, Sec.1, Hsin Tai Wu Rd., Hsichih,
Taipei Hsien 221, Taiwan, R.O.C.

Title: **PCIE MINI CARD SLOT**

Size: A3 | Document Number: **Kendo-3 UMA** | Rev: SE

Date: Thursday, October 07, 2010 | Sheet 54 of 107

MEDIA I/F	SD/MMC	MEMORYSTICK	XD
MFIO00	SDWP#	MSBS	XD_D7
MFIO01	SD_D1		XD_D6
MFIO02	SD_D0	MS_D1	XD_D5
MFIO03	(SD_D7)		XD_D4
MFIO04	(SD_D6)	(MS_D5)	XD_D3
MFIO05	SD_CLK	MS_D0	XD_D2
MFIO06			XD_D1
MFIO07	(SD_D5)	(MS_D4)	XD_D0
MFIO08	SD_CMD	MS_D2	XD_WP#
MFIO09	(SD_D4)	(MS_D6)	XD_WE#
MFIO10	SD_D3	MS_D3	XD_ALE
MFIO11	SD_D2		XD_CLE
MFIO12			XD_CE#
MFIO13		(MS_D7)	XD_RE#
MFIO14		MS_CLK	XD_R/B
MFCD0#	SDCD#		XDCD0#
MFCD1#		MSINS#	XDCD1#

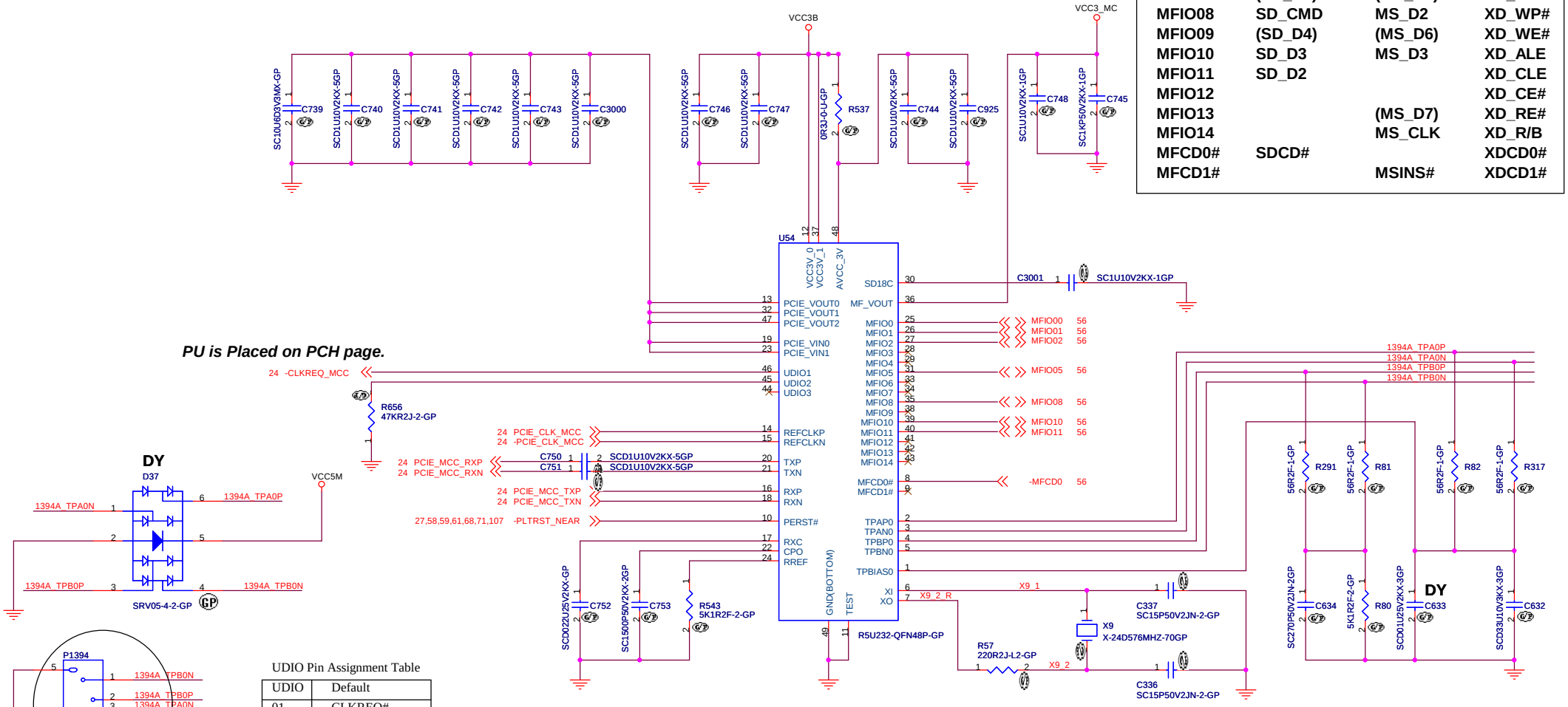

Change to UV31413-WRU0P-7H
Wait for symbol

UDIO Pin Assignment Table

UDIO	Default
01	CLKREQ#
02	SCL/SROM_EN
03	SDA

MFCDxN Detection Table

MFCDxN		Card Type
1	0	
H	H	(No Card)
H	L	SD Card/MMC
L	H	MemoryStick
L	L	XD Card

	Supplier	Vendo P/N	WISTRON P/N
1	HARMONY	XTAL 24.576M 12P30PPM HSX530G SMD	82.30023.611
2	TXC	XTAL 24.576M 12P30PPM SMD	82.30023.651

Richo Recommended Conditions:
Normal Frequency: 24.576MHz
Frequency Tolerance: +/- 50ppm.
Load Capacitance: 10pF.
Effective Series Resistance: 50-ohm.
Effective Shunt Capacitance: 7pF.

KDS Recommended Conditions:
Normal Frequency: 24.576MHz
Frequency Tolerance: +/- 30ppm.
Load Capacitance: 12pF+/-0.2.
Effective Series Resistance: 50-ohm.
Effective Shunt Capactiance: 7pF.

<Variant Name>

緯創資通 Wistron Corporation
21F, 88, Sec.1, Hsin Tai Wu Rd., Hsichih, Taipei Hsien 221, Taiwan, R.O.C.

Title: 1394/MEDIA CARD CONTROLLER

Size: A3 | Document Number: Kendo-3 UMA | Rev: SE

Date: Thursday, October 07, 2010 | Sheet 55 of 107

SD/MMC/MMC+ Card Reader

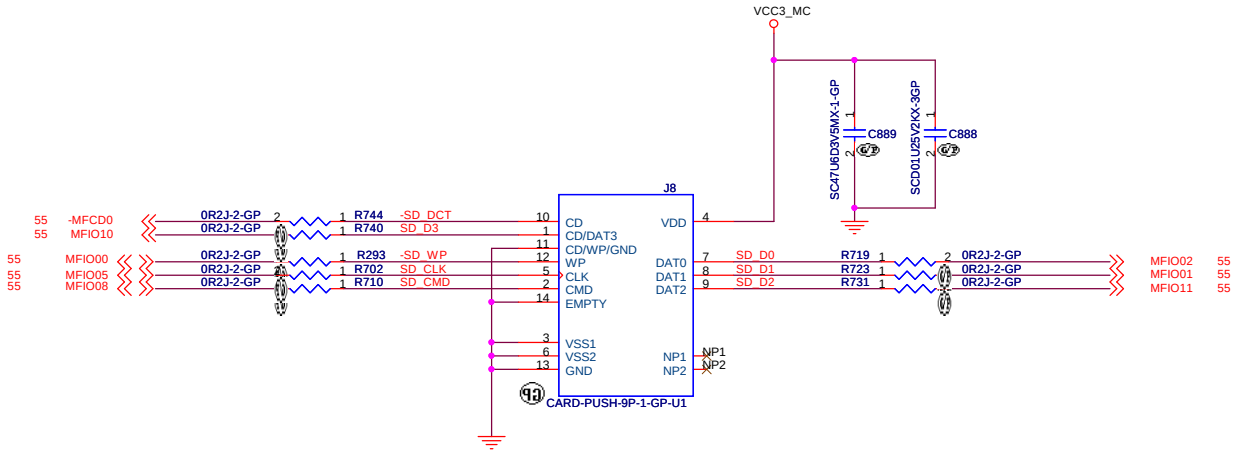

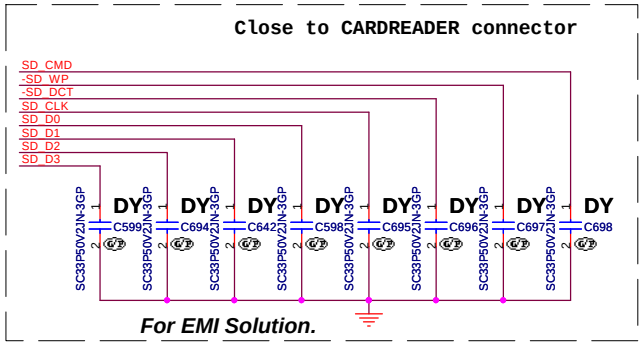

		U50, U51, U52, U53	Wistron part number
1	TOSHIBA	TC7SBL384AFU-GP	73.7S384.007
2	NXP	74LVC1G384GW	73.1G384.AHH
3	TI	TS5A3167DCKR	74.53167.A9F

<Variant Name>

緯創資通 **Wistron Corporation**
21F, 88, Sec.1, Hsin Tai Wu Rd., Hsichih,
Taipei Hsien 221, Taiwan, R.O.C.

Title: **MEDIA CARD INTERFACE**

Size: A3 | Document Number: **Kendo-3 UMA** | Rev: **SE**

Date: Thursday, October 07, 2010 | Sheet 56 of 107

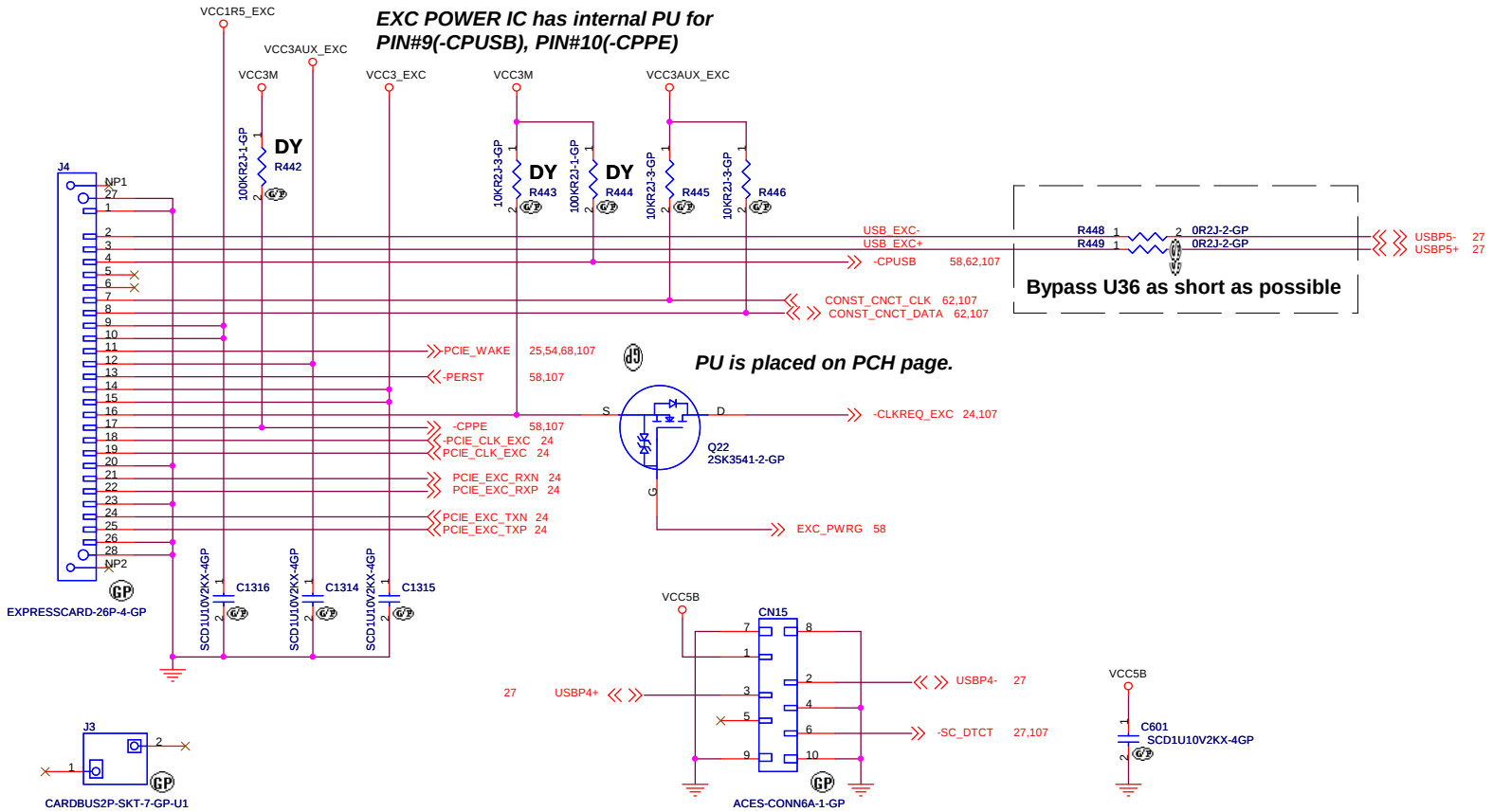

<Variant Name>

緯創資通 **Wistron Corporation**
21F, 88, Sec.1, Hsin Tai Wu Rd., Hsichih,
Taipei Hsien 221, Taiwan, R.O.C.

Title: ***Express Card/SMART CARD IF***

Size	Document Number	Rev
A3	**Kendo-3 UMA**	SE

Date: Thursday, October 07, 2010 Sheet 57 of 107

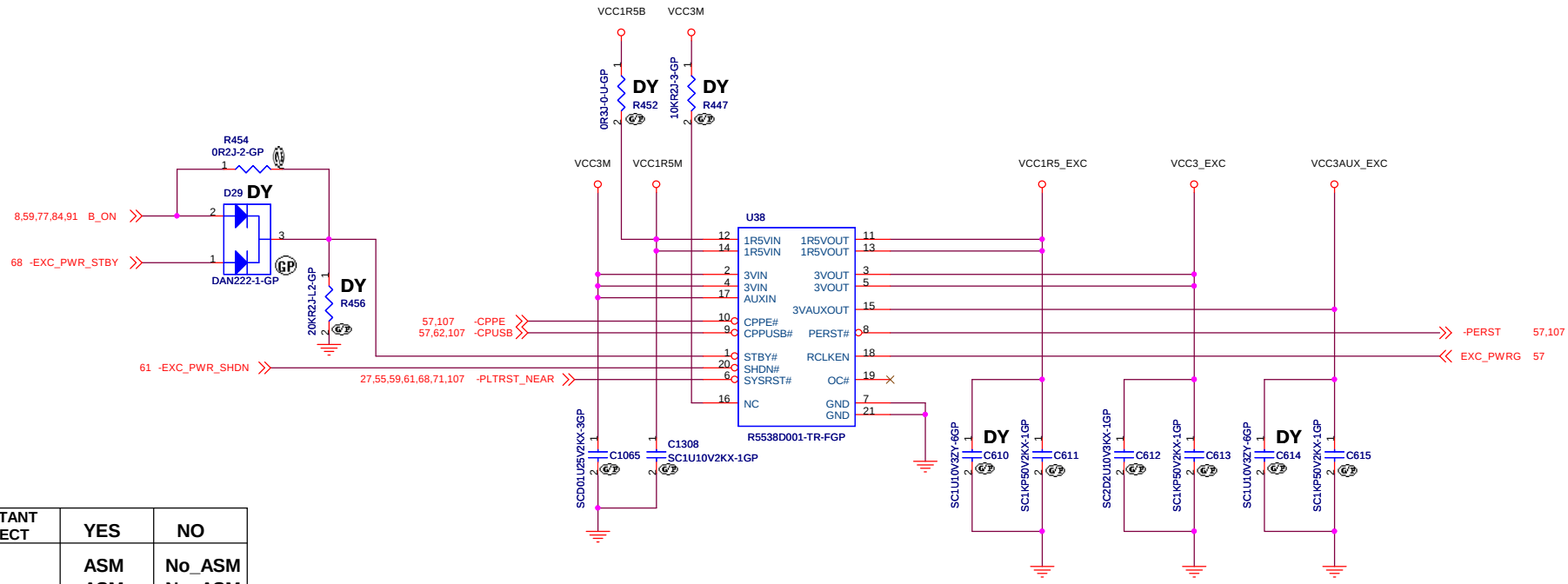

CONSTANT CONNECT	YES	NO
D29	ASM	No_ASM
R456	ASM	No_ASM
R454	No_ASM	ASM

LOGIC

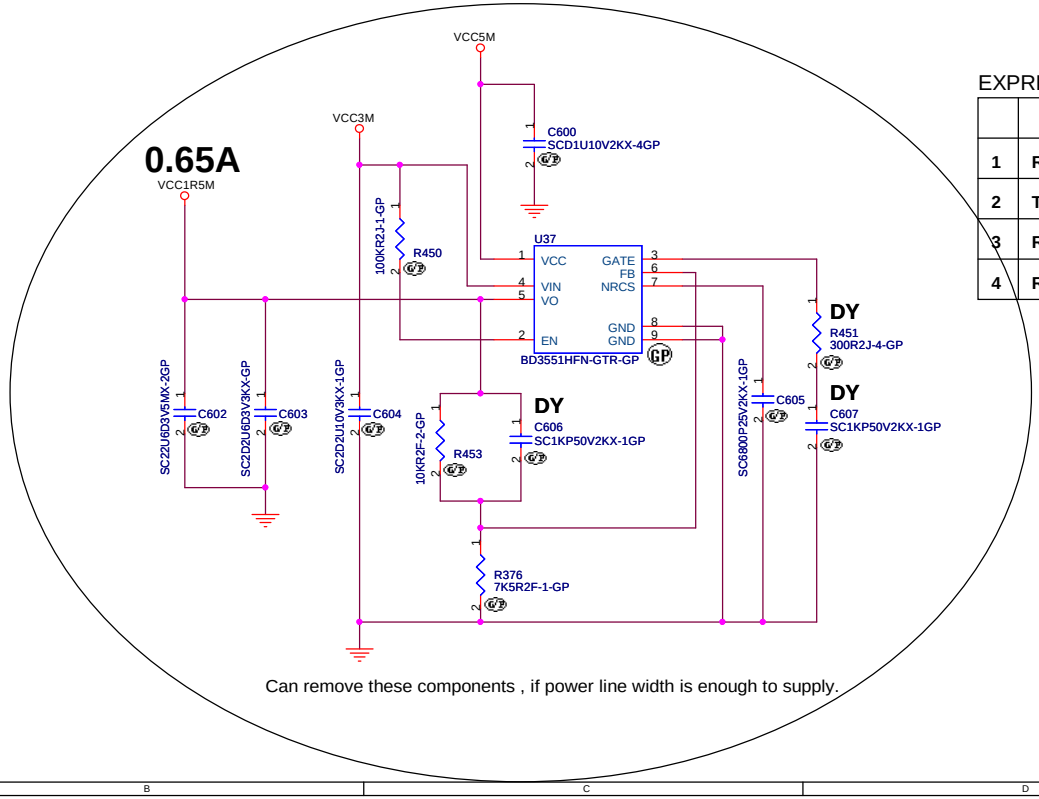

Can remove these components , if power line width is enough to supply.

EXPRESS POWER SW table

		U38	Wistron part number
1	RICOH	R5538D001-TR-F	74.05538.073
2	TI	TPS2231RGP	74.02231.073
3	ROHM	BD4156MUV-E2	41R0809BA
4	ROHM	BD4157MUV	74.04157.073

<Variant Name>

緯創資通 Wistron Corporation
21F, 88, Sec.1, Hsin Tai Wu Rd., Hsichih,
Taipei Hsien 221, Taiwan, R.O.C.

Title: SLOT POWER CONTROL

Size: A3 | Document Number: Kendo-3 UMA | Rev: SE

Date: Thursday, October 07, 2010 | Sheet 58 of 107

Golden Finger for Debug Board

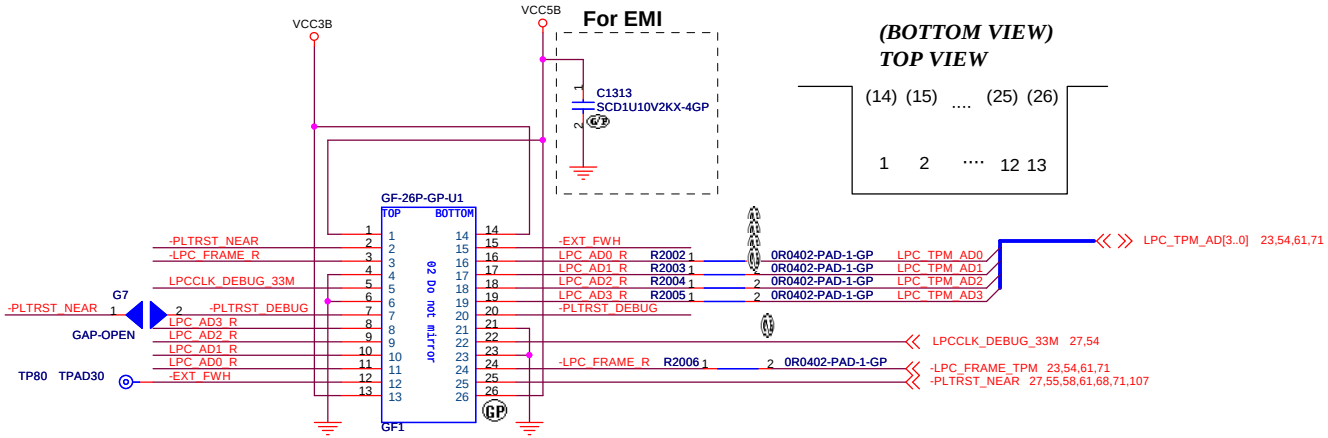

64Mbit SPI FLASH :

Package	Supplier	Vendor P/N	Lenovo P/N	Wistron P/N
SO8	Macronix	MX25L6436EM2I-10G		72.25643.001
	Winbond	W25Q64CVSSIG		72.25Q64.B01
	SST	SST25VF064C		72.25064.B01
WSON	Numonyx	M25PX64-VMD6TG		72.25P64.E01

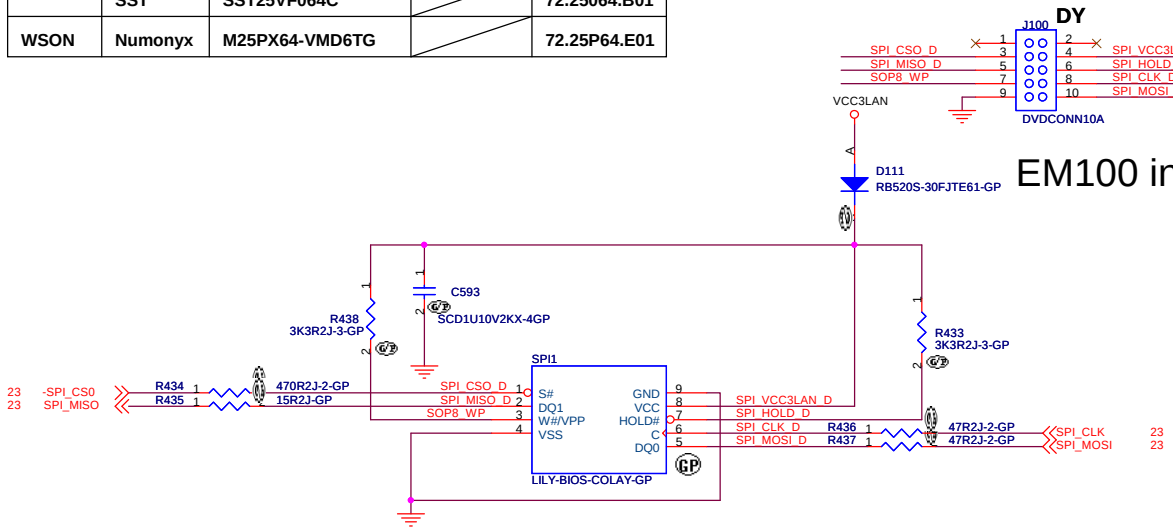

Dual foot print for WSON and SO8.

Lenovo Debug Tool IF.

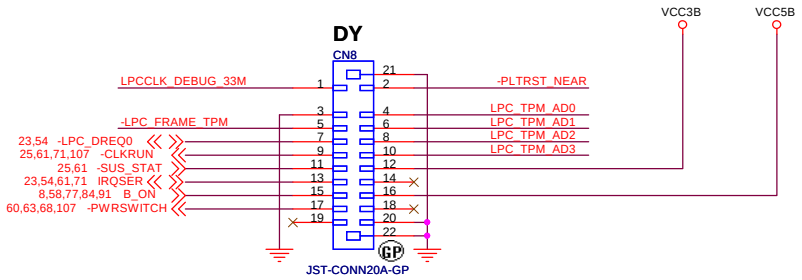

<Variant Name>

緯創資通 Wistron Corporation
21F, 88, Sec.1, Hsin Tai Wu Rd., Hsichih,
Taipei Hsien 221, Taiwan, R.O.C.

Title	SPI FLASH	
Size A3	Document Number Kendo-3 UMA	Rev SE
Date: Thursday, October 07, 2010	Sheet 59 of 107	

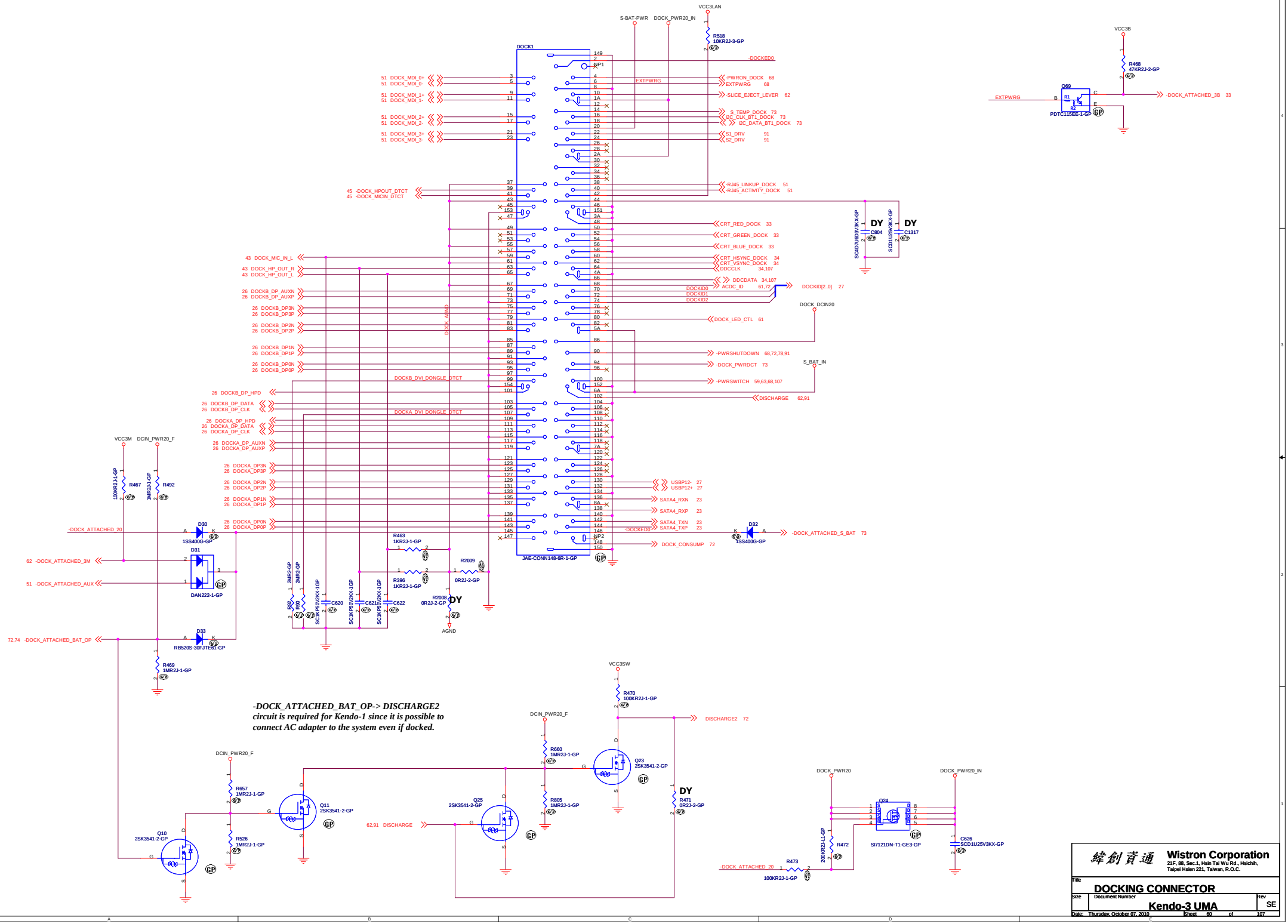
DOCK1
JAE-CONN148-6R-1-GP
VCC3LAN
S-BAT-PWR
DOCK_PWR20_IN
R518 10KR2J-3-GP
-DOCKED0
EXTPWRG
-PWRON_DOCK 68
EXTPWRG 68
-SLICE_EJECT_LEVER 62
S_TEMP_DOCK 73
I2C_CLK_BT1_DOCK 73
I2C_DATA_BT1_DOCK 73
S1_DRV 91
S2_DRV 91
-RJ45_LINKUP_DOCK 51
-RJ45_ACTIVITY_DOCK 51
CRT_RED_DOCK 33
CRT_GREEN_DOCK 33
CRT_BLUE_DOCK 33
CRT_HSYNC_DOCK 34
CRT_VSYNC_DOCK 34
DDCCLK 34,107
DDCDATA 34,107
ACDC_ID 61,72
DOCKID0
DOCKID1
DOCKID2
DOCKID[2..0] 27
DOCK_LED_CTL 61
DOCK_DCIN20
-PWRSHUTDOWN 68,72,78,91
-DOCK_PWRDCT 73
S_BAT_IN
-PWRSWITCH 59,63,68,107
DISCHARGE 62,91
DOCKB_DVI_DONGLE_DTCT
DOCKA_DVI_DONGLE_DTCT
DOCK_AGND
USBP12- 27
USBP12+ 27
SATA4_RXN 23
SATA4_RXP 23
SATA4_TXN 23
SATA4_TXP 23
-DOCKED0
DOCK_CONSUMP 72
-DOCK_ATTACHED_S_BAT 73
-DOCK_ATTACHED_20
62 -DOCK_ATTACHED_3M
51 -DOCK_ATTACHED_AUX
72,74 -DOCK_ATTACHED_BAT_OP
D30 1SS400G-GP
D31 DAN222-1-GP
D32 1SS400G-GP
D33 RB520S-30FJTE61-GP
R463 1KR2J-1-GP
R396 1KR2J-1-GP
R2009 0R2J-2-GP
R2008 0R2J-2-GP
DY
AGND
VCC3M
DCIN_PWR20_F
R467 10KR2J-1-GP
R492 1MR2J-1-GP
R469 1MR2J-1-GP
VCC3B
R468 47KR2J-2-GP
Q69 PDTC115EE-1-GP
-DOCK_ATTACHED_3B 33
VCC3SW
R470 100KR2J-1-GP
DISCHARGE2 72
R660 1MR2J-1-GP
Q23 2SK3541-2-GP
R471 0R2J-2-GP
R805 1MR2J-1-GP
Q25 2SK3541-2-GP
62,91 DISCHARGE
R657 1MR2J-1-GP
Q11 2SK3541-2-GP
R526 1MR2J-1-GP
Q10 2SK3541-2-GP
DOCK_PWR20
DOCK_PWR20_IN
Q24 SI7121DN-T1-GE3-GP
R472 200KR2J-1-GP
R473 100KR2J-1-GP
-DOCK_ATTACHED_20
C626 SCD1U25V3KX-GP
C804 SCD47U6D3V3KX-GP
C1317 SCD1U25V3KX-GP
C620 SCD1KP50V2KX-1GP
C621 SCD1KP50V2KX-1GP
C622 SCD1KP50V2KX-1GP
R502 2MR2-GP
R503 2MR2-GP
-DOCK_ATTACHED_BAT_OP-> DISCHARGE2
circuit is required for Kendo-1 since it is possible to
connect AC adapter to the system even if docked.
緯創資通 Wistron Corporation
21F, 88, Sec.1, Hsin Tai Wu Rd., Hsichih,
Taipei Hsien 221, Taiwan, R.O.C.
Title
DOCKING CONNECTOR
Size
Document Number
Kendo-3 UMA
Rev
SE
Date: Thursday, October 07, 2010
Sheet 60 of 107

Necessity of R198 depends on location of H8

Check H8 source to perform maxpower management

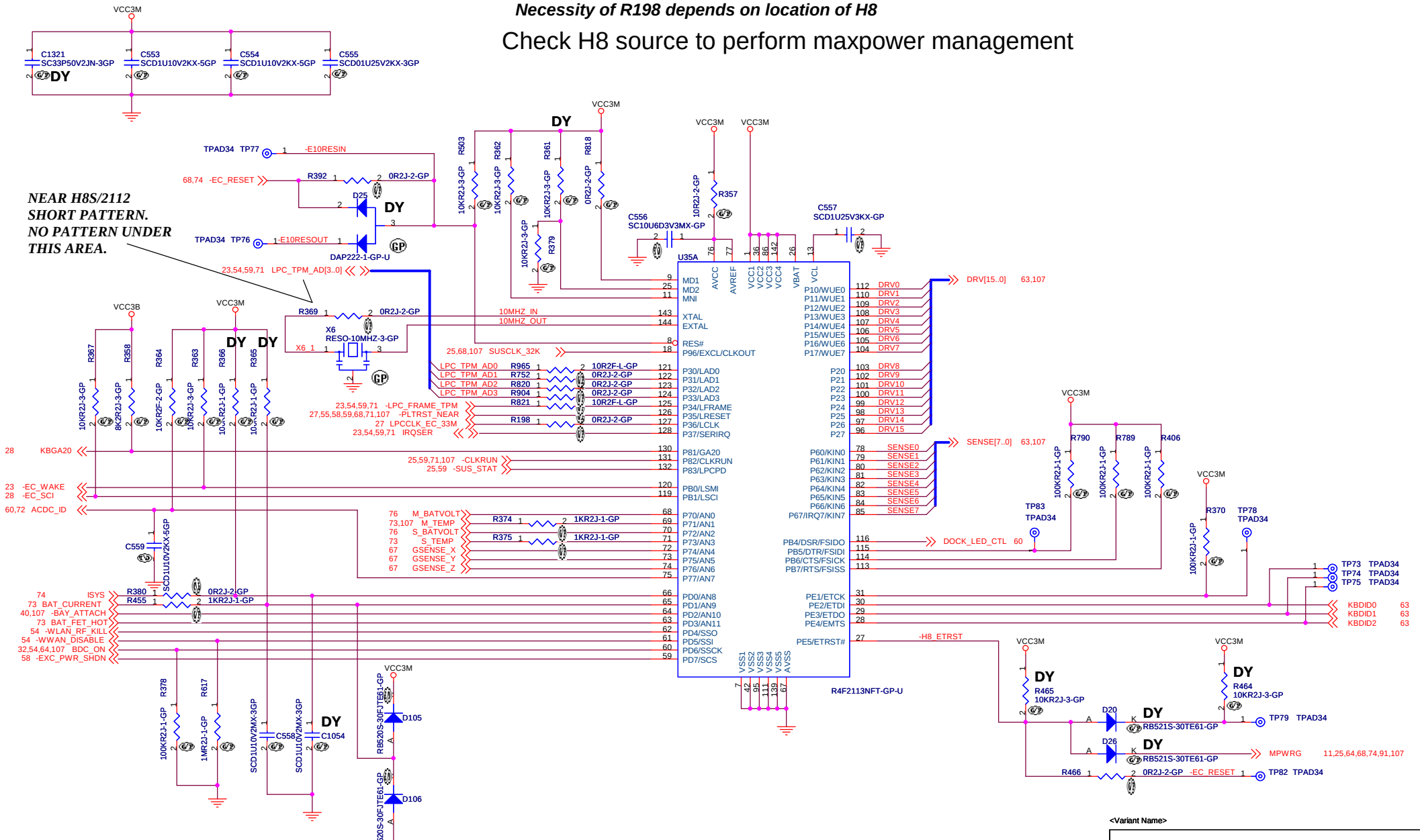

<Variant Name>

Wistron Corporation
21F, 88, Sec.1, Hsin Tai Wu Rd., Hsichih,
Taipei Hsien 221, Taiwan, R.O.C.

Title: ***H8S/2113 (1/2)***

Size: A3 | Document Number: **Kendo-3 UMA** | Rev: **SE**

Date: Thursday, October 07, 2010 | Sheet 61 of 107

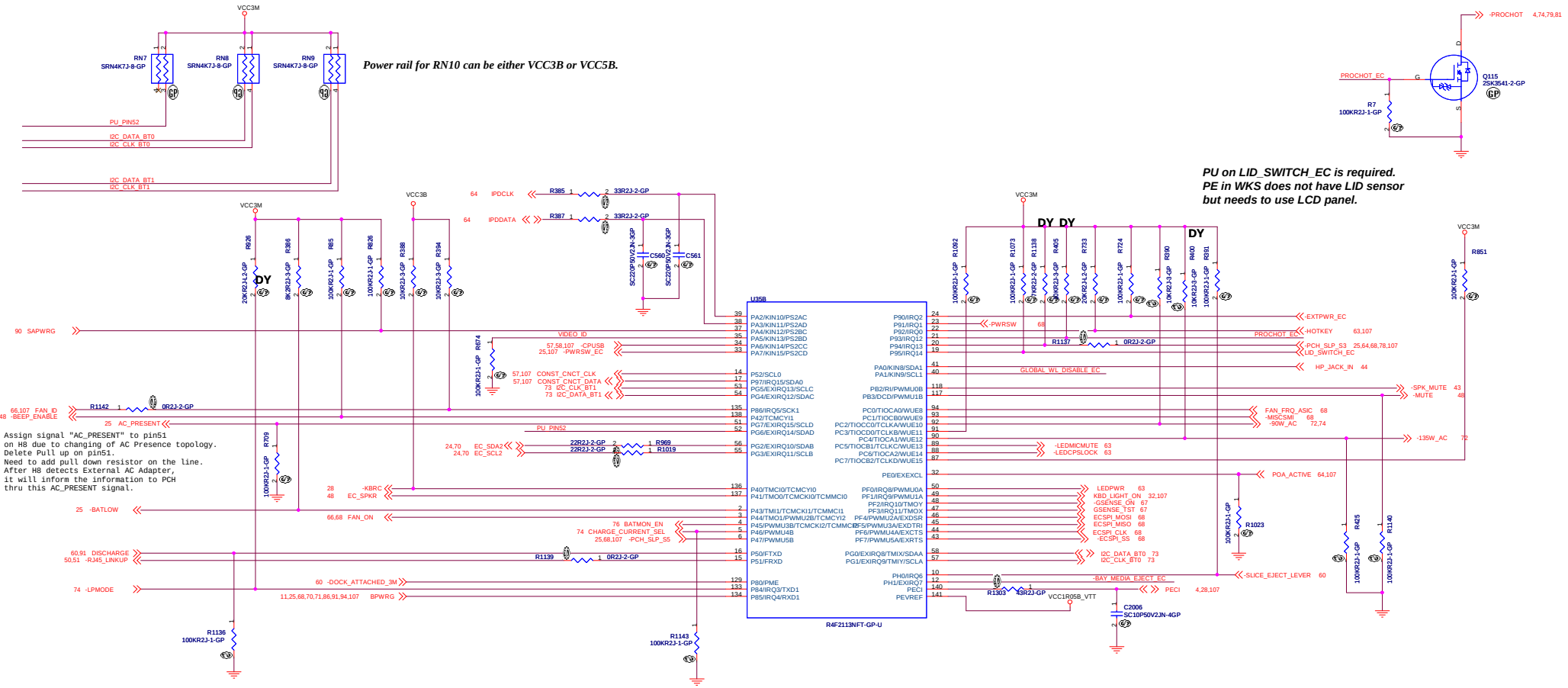

System Detection using external strap on Kendo-3

	UMA	SWG	WS
#13 PGPIO3 of Thinker-1 (U59)	L	L	H
#35 VIDEO_ID of H8 (U35B)	L	H	H

pls. modify this logic table

E10A Debug I/F	Enable	Disable
R392	NO ASM	ASM
R466	NO ASM	ASM
D25	ASM	NO ASM
D26	ASM	NO ASM
D20	ASM	NO ASM
R360	ASM	ASM
R361	ASM	NO ASM
R464	ASM	NO ASM
R465	ASM	NO ASM
R379	NO ASM	ASM

LOGIC

Table

GFX	INT.
R674	ASM

LOGIC

TEST PAD X2
BOTTOM SIDE
DO NOT MOVE AFTER FIX

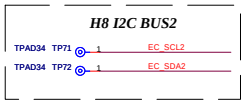

DO NOT MOVE

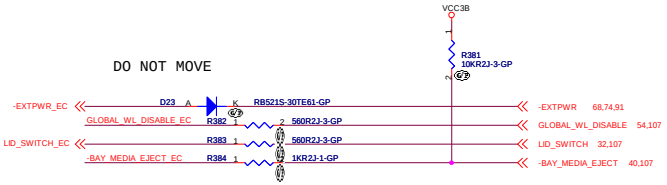

<Variant Name>

Wistron Corporation
21F, 88, Sec.1, Hsin Tai Wu Rd., Hsichih,
Taipei Hsien 221, Taiwan, R.O.C.

Title: H8S/2113(2/2)

Size: A2 | Document Number: Kendo-3 UMA | Rev: SE

Date: Thursday, October 07, 2010 | Sheet 62 of 107

Keyboard Connector

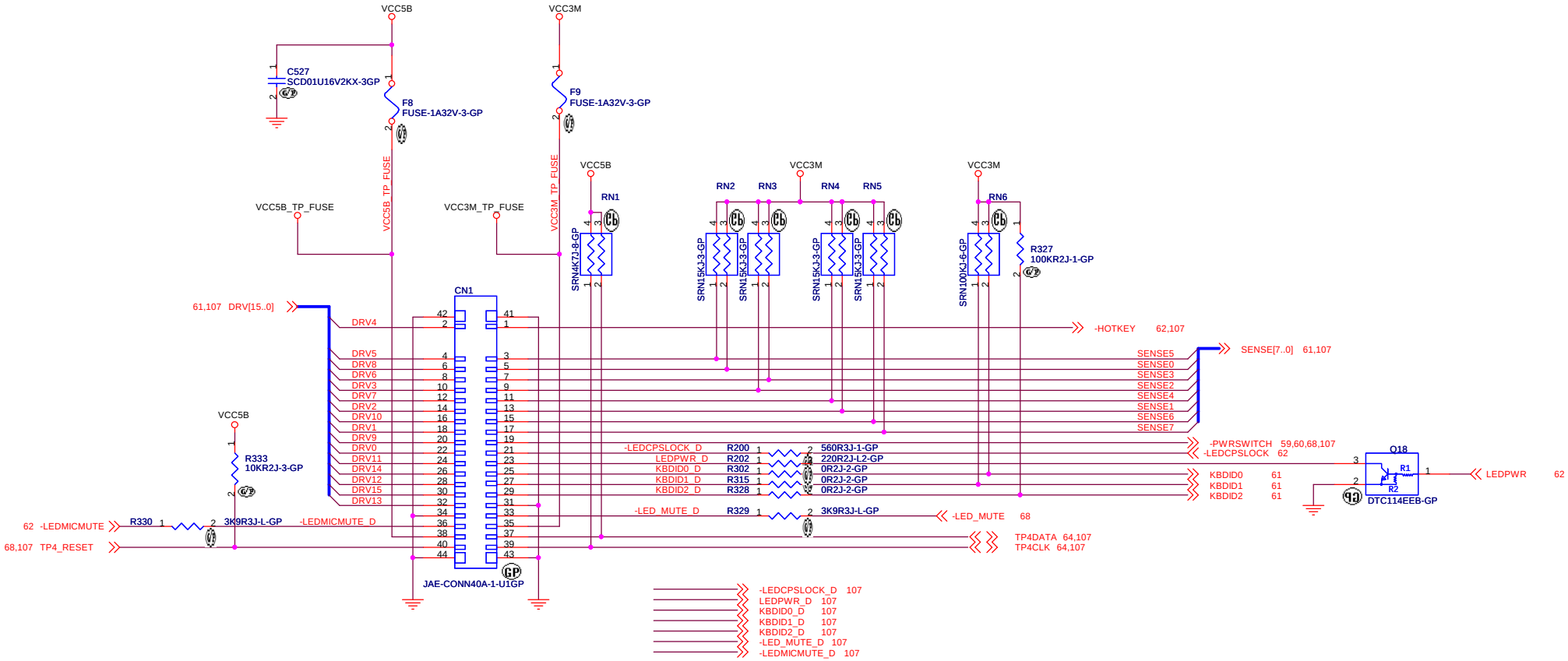

HOTKEY#	TP4CLK
DRV4	TP4RESET

Keyboard Connector Top View

Near CN1

-PWRSWITCH — TP81 TPAD60

<Variant Name>

緯創資通 **Wistron Corporation**
21F, 88, Sec.1, Hsin Tai Wu Rd., Hsichih,
Taipei Hsien 221, Taiwan, R.O.C.

Title: ***KEYBOARD CONN***

Size	Document Number	Rev
A3	**Kendo-3 UMA**	SE

Date: Thursday, October 07, 2010 Sheet 63 of 107

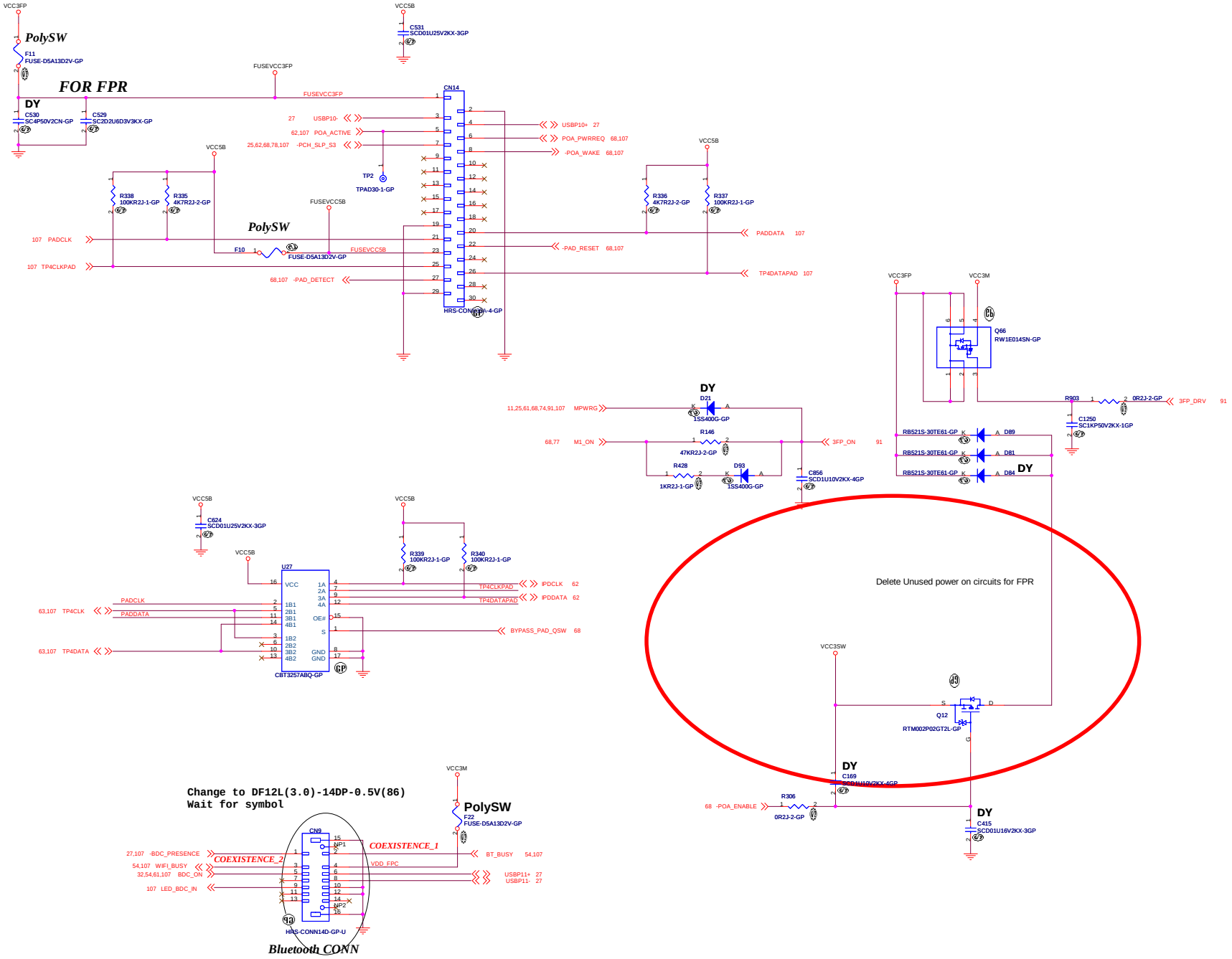

<Variant Name>

緯創資通 **Wistron Corporation**
21F, 88, Sec.1, Hsin Tai Wu Rd., Hsichih,
Taipei Hsien 221, Taiwan, R.O.C.

Title: **TOUCH PAD CONNECTOR**

Size	Document Number	Rev
A2	Kendo-3 UMA	SE

Date: Thursday, October 07, 2010 Sheet 64 of 107

BLANK

<Variant Name>

緯創資通 **Wistron Corporation**
21F, 88, Sec.1, Hsin Tai Wu Rd., Hsichih,
Taipei Hsien 221, Taiwan, R.O.C.

Title	***BLANK***	
Size A4	Document Number **Kendo-3 UMA**	Rev **SE**
Date: Thursday, October 07, 2010	Sheet 65 of 107	

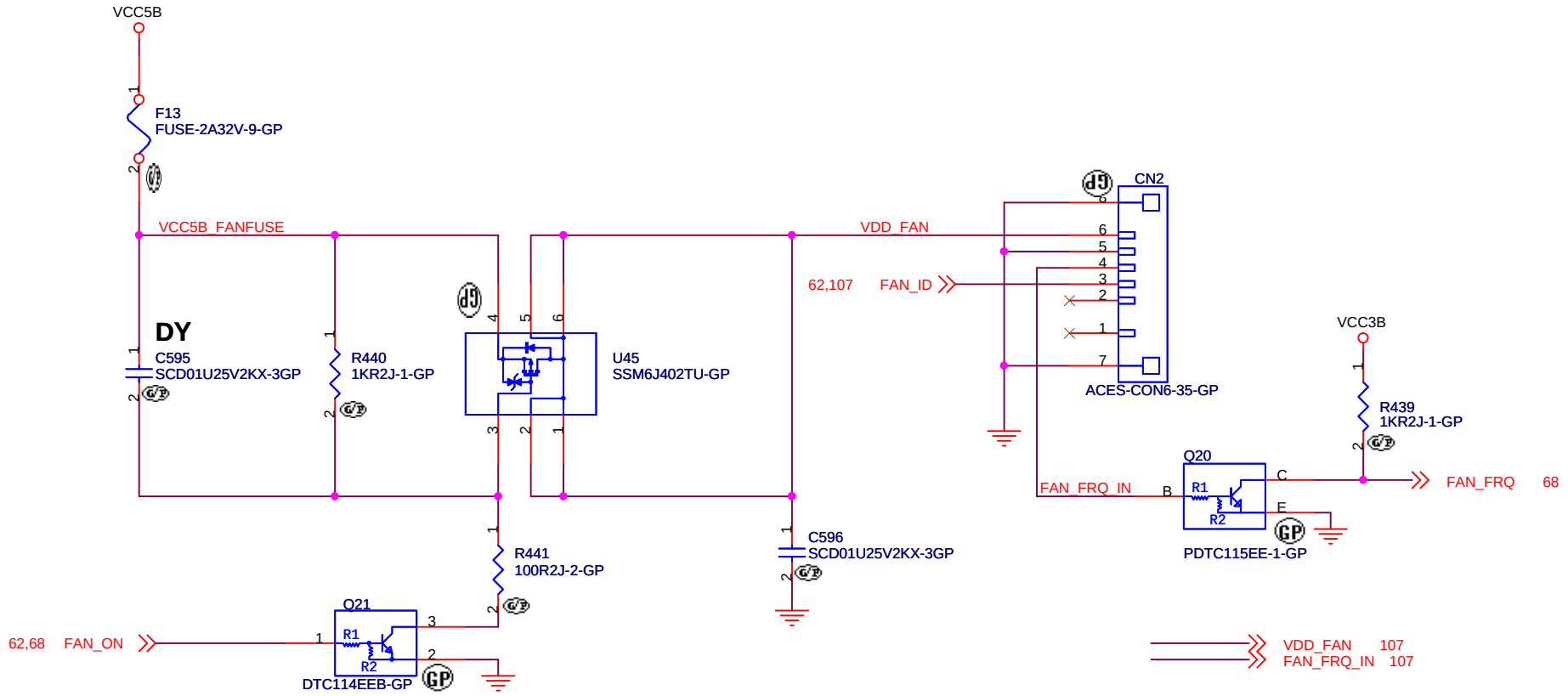

<Core Design>

緯創資通 **Wistron Corporation**
21F, 88, Sec.1, Hsin Tai Wu Rd., Hsichih,
Taipei Hsien 221, Taiwan, R.O.C.

Title
FAN CONNECTOR

Size	Document Number	Rev
A4	**Kendo-3 UMA**	SE

Date: Thursday, October 07, 2010 Sheet 66 of 107

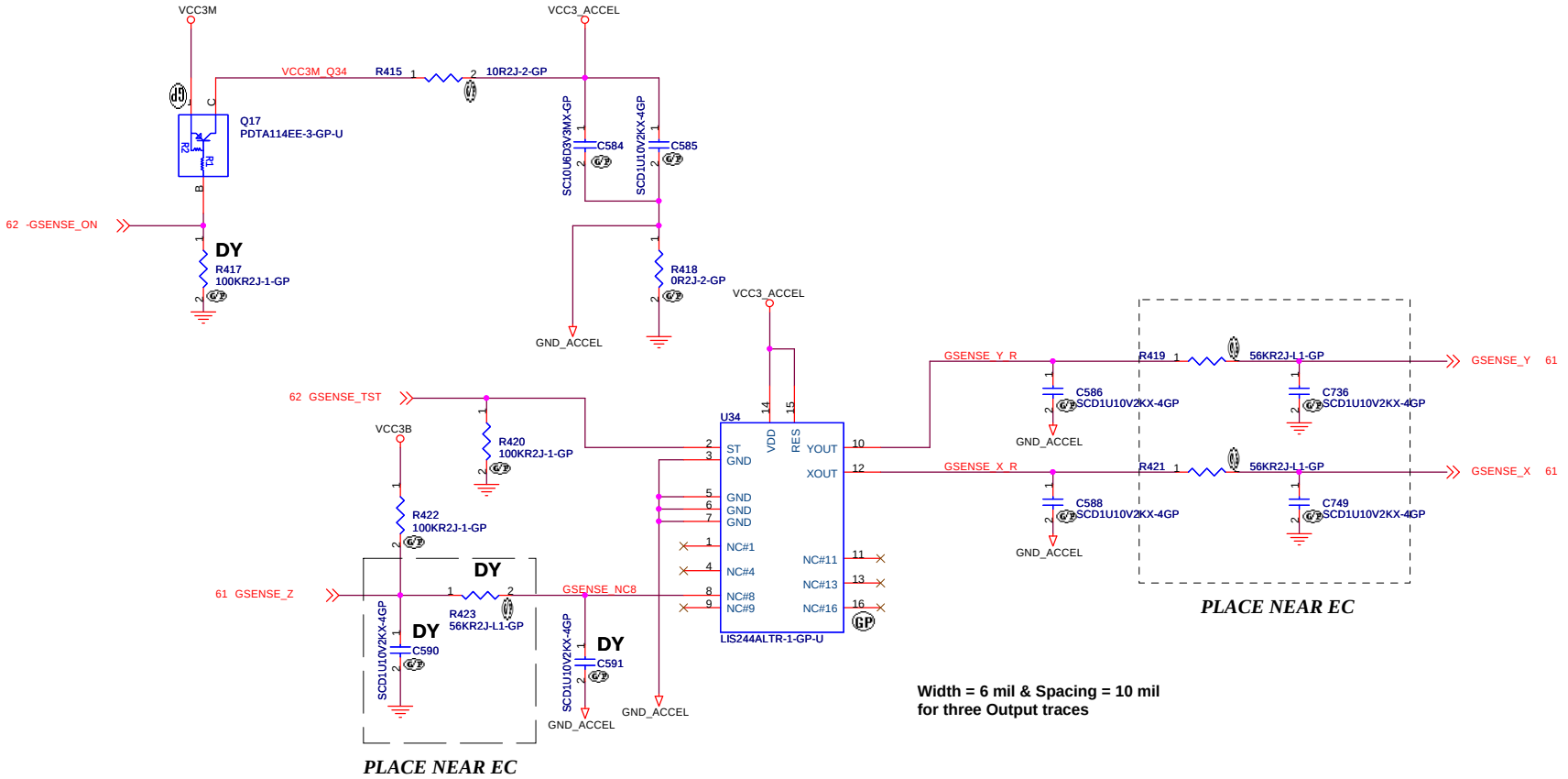

Width = 6 mil & Spacing = 10 mil for three Output traces

	LIS244AL LIS34AL	NO ACC.
R417	NO-ASM	ASM
R420	ASM	ASM
U34	ASM	NO-ASM
Q17	ASM	NO-ASM
R415	10-OHM	NO-ASM
C585	ASM	NO-ASM
C584	ASM	NO-ASM
C586	ASM	NO-ASM
C588	ASM	NO-ASM
R419	56K	NO-ASM
C736	ASM	NO-ASM
R421	56K	NO-ASM
C749	ASM	NO-ASM
C591	NO-ASM	NO-ASM
R423	NO-ASM	NO-ASM
C590	NO-ASM	NO-ASM
R422	ASM	ASM

Layout Comment :

(1) Place C586, C588, Q17, R415, R417, C584, C585, R420 close to U34.

(2) Avoid routing under DCDC switching area.

<Core Design>

緯創資通 **Wistron Corporation**
21F, 88, Sec.1, Hsin Tai Wu Rd., Hsichih, Taipei Hsien 221, Taiwan, R.O.C.

Title: ***G-SENSOR***

Size: A3 | Document Number: **Kendo-3 UMA** | Rev: **SE**

Date: Thursday, October 07, 2010 | Sheet 67 of 107

Delete signal "AC_PRESENT" due to reassignment to H8.
Because Pin 72 is pushpull output buffer,
leave the pin as NC.

Pin 9 (LGPIO7) on Thinker-1 has just external pull up to VCC3M with 100K.

Delete signal "USB_AO_SEL1",
because control mode is changed to following..
USB_AO_SEL0: High --> Path through mode
USB_AO_SEL0: Low --> Automatic detection mode

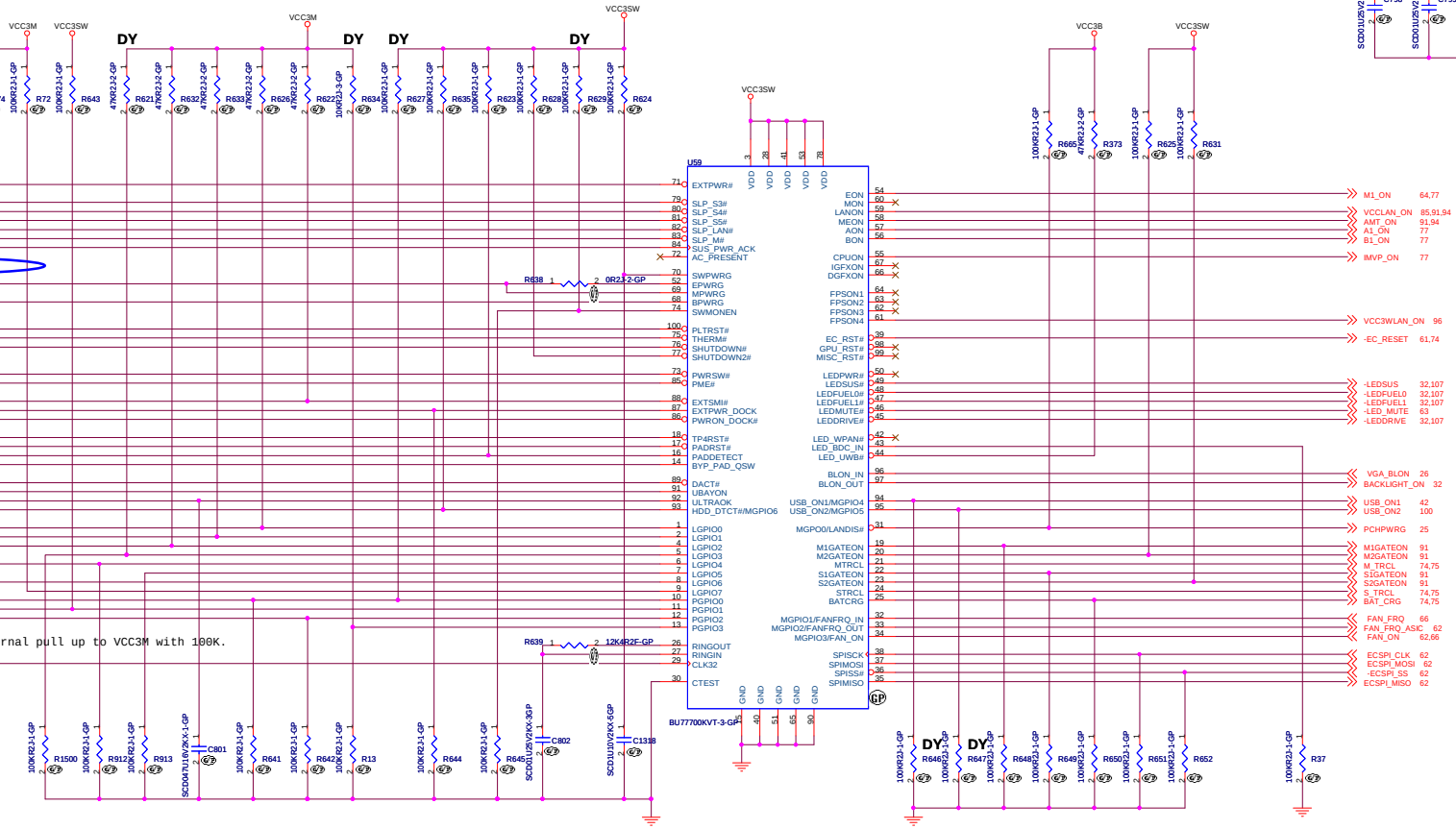

	Supplier	Vendo P/N	WISTRON P/N
1	ROHM	BU77700KVT	54Y9009BA
2	TOSHIBA	TC200G02EFG-1036JQZ	71.20002.B0G

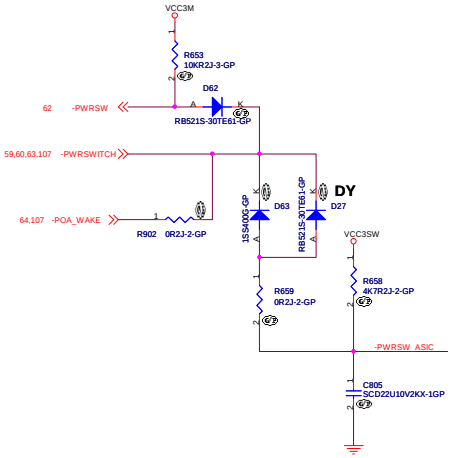

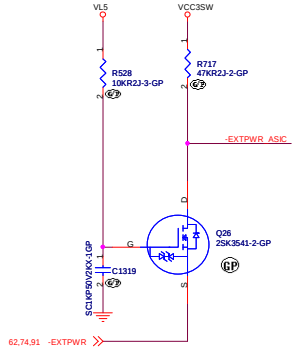

1023 update -> chand 1R8VIDEO_PLL_ON to 1R05VIDEO_PLL_ON

<Variant Name>

緯創資通 **Wistron Corporation**
21F, 88, Sec.1, Hsin Tai Wu Rd., Hsichih,
Taipei Hsien 221, Taiwan, R.O.C.

Title: **THINKER-1**

Size: A2 | Document Number: **Kendo-3 UMA** | Rev: **SE**

Date: Thursday, October 07, 2010 | Sheet 68 of 107

BLANK

<Variant Name>

緯創資通 Wistron Corporation
21F, 88, Sec.1, Hsin Tai Wu Rd., Hsichih,
Taipei Hsien 221, Taiwan, R.O.C.

Title	BLANK	
Size A4	Document Number Kendo-3 UMA	Rev SE
Date: Thursday, October 07, 2010	Sheet 69 of 107	

Sensor	Device	Placed on
S0(Body)	GBE	Bottom
S1	N/A	N/A
S2	DIMM(TOP)	Top
S3	DIMM(BOT)	Bottom
S4	WAN	Top
S5	WLAN	Top
S6	PCH/BASE COVER	Bottom
S7	EXPRESS SLOT	Top

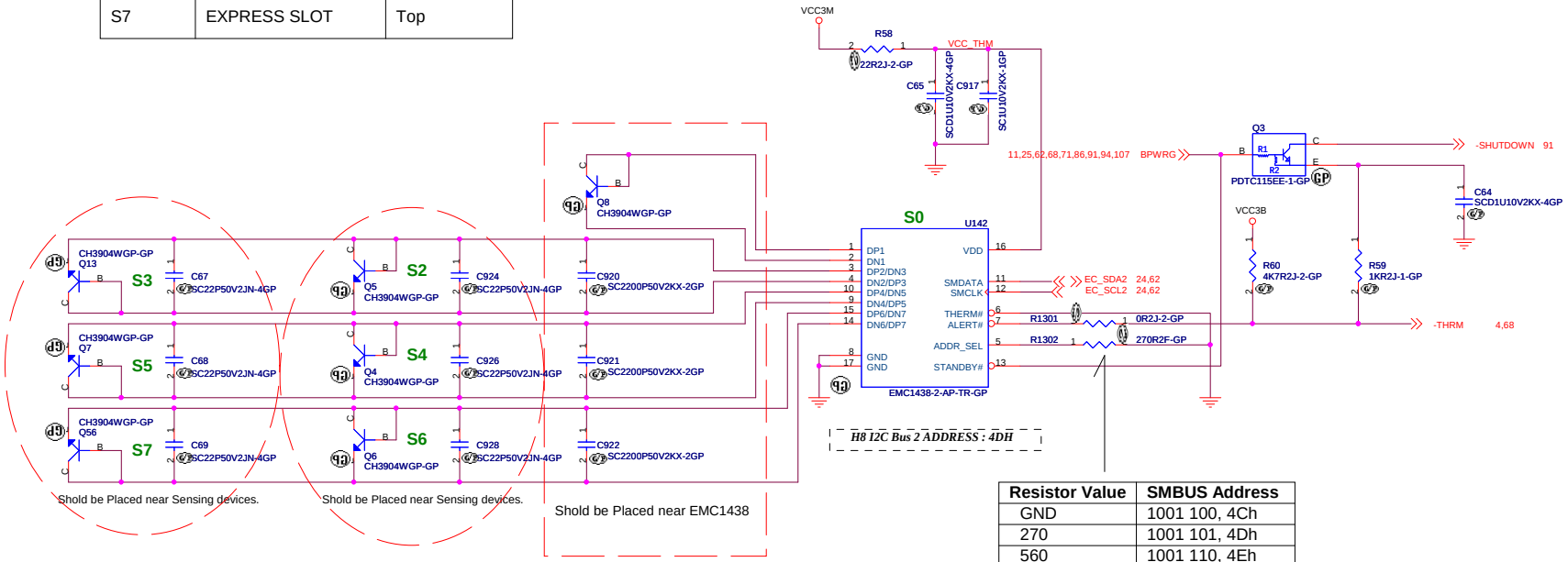

Sensor Location will be decided based on the placement.

Resistor Value	SMBUS Address
GND	1001 100, 4Ch
270	1001 101, 4Dh
560	1001 110, 4Eh
1K	1001 111, 4Fh
1.5K	1001 001, 49h
2.7K	1001 010, 4Ah
5.6K	1001 011, 4Bh
>=18K	0011 000,18h

Layout Comment :

(1) Thermal sensor trace lines should not be overlapped with other high frequency trace lines in other layers.
(2) Also, it should not be overlapped with large amplitude trace lines either.

<Variant Name>

緯創資通 **Wistron Corporation**
21F, 88, Sec.1, Hsin Tai Wu Rd., Hsichih, Taipei Hsien 221, Taiwan, R.O.C.

Title: ***THERMAL SENSOR***

Size: Custom | Document Number: **Kendo-3 UMA** | Rev: **SE**

Date: Thursday, October 07, 2010 | Sheet 70 of 107

EEPROM

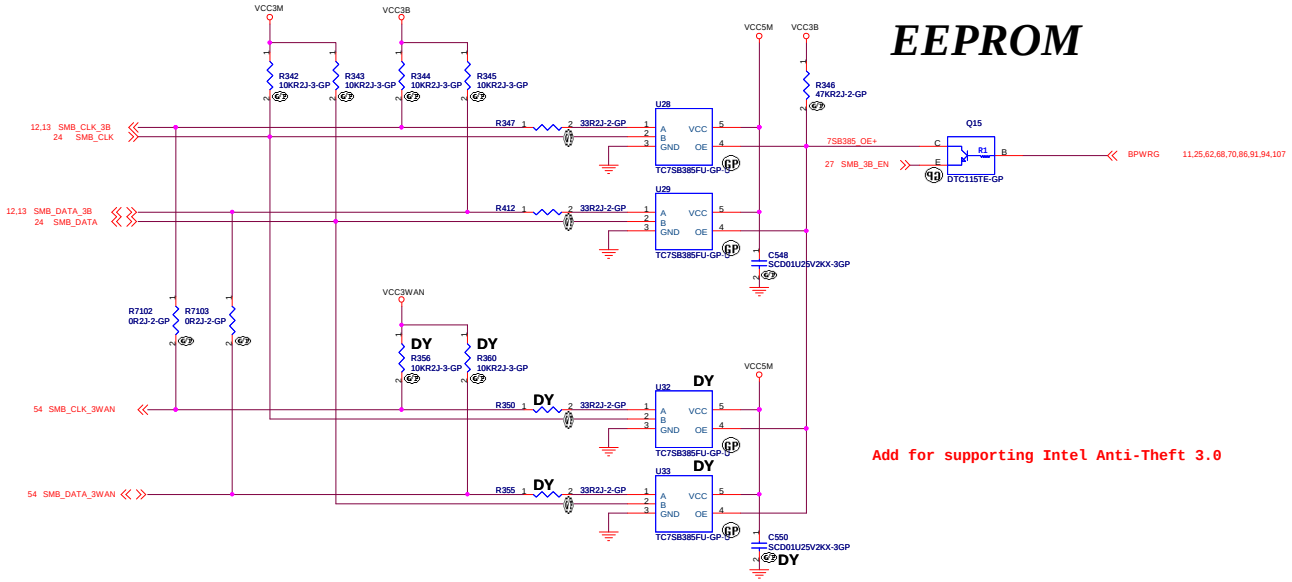

Add for supporting Intel Anti-Theft 3.0

		U28, U29	Wistron part number
1	TOSHIBA	TC7SB385FU-GP	54Y9027AA
2	Pericom	PI5A121CEX	73.5A121.00H

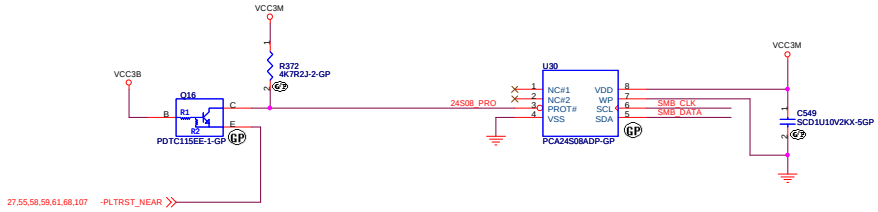

		U30	Wistron part number
1	NXP	PCA24S08DP-GP	54Y9016BA
2	ROHM	BUL08-1FVJ-W	72.BUL08.00Q

TCPA

	NO TPM	ST Micro ST19NP18-TPM-A
U31	NO_ASM	ASM
C552	NO_ASM	ASM
C672	NO_ASM	NO_ASM
R354	NO_ASM	ASM
R371	NO_ASM	NO_ASM
R953	NO_ASM	NO_ASM
R353	NO_ASM	NO_ASM
R806	ASM	NO_ASM
R654	NO_ASM	ASM

LOGIC

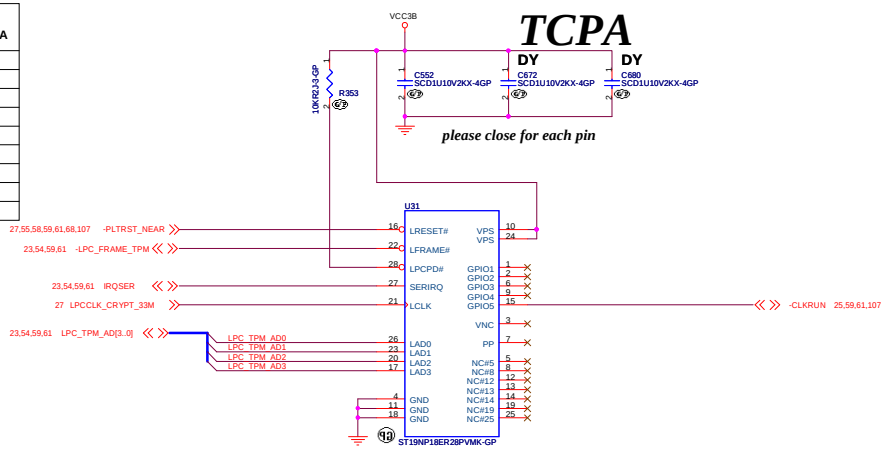

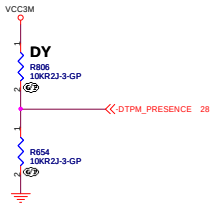

<Core Design>

緯創資通 Wistron Corporation
21F, 88, Sec.1, Hsin Tai Wu Rd., Hsichih,
Taipei Hsien 221, Taiwan, R.O.C.

Title: EEPROM/SMBUS SW/TPM

Size: A2 | Document Number: Kendo-3 UMA | Rev: SE

Date: Thursday, October 07, 2010 | Sheet 71 of 107

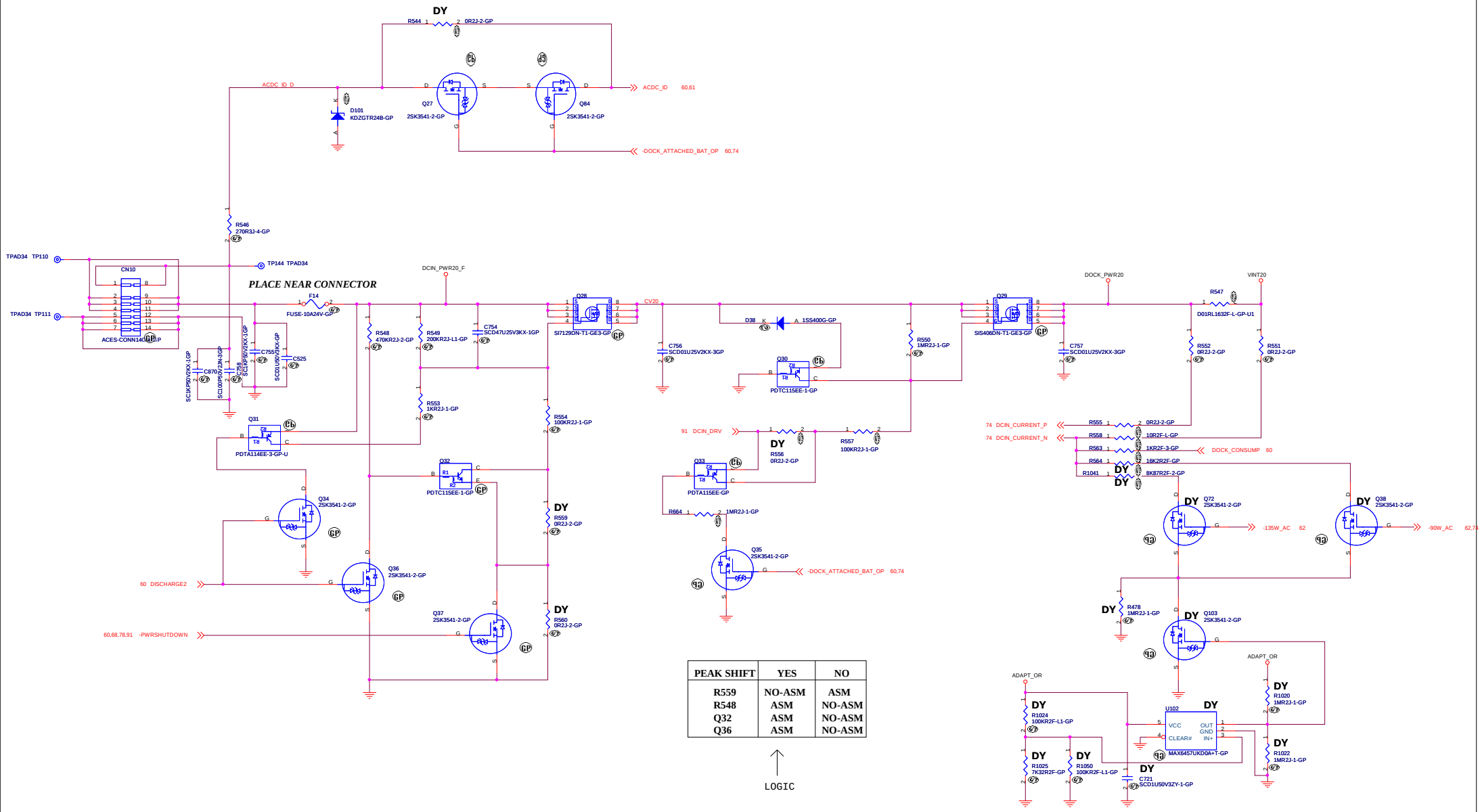

PEAK SHIFT	YES	NO
R559	NO-ASM	ASM
R548	ASM	NO-ASM
Q32	ASM	NO-ASM
Q36	ASM	NO-ASM

LOGIC

<Core Design>

緯創資通 **Wistron Corporation**
21F, 88, Sec.1, Hsin Tai Wu Rd., Hsichih,
Taipei Hsien 221, Taiwan, R.O.C.

Title: **DC-IN**

Size: A2 | Document Number: **Kendo-3 UMA** | Rev: SE

Date: Thursday, October 07, 2010 | Sheet 72 of 107

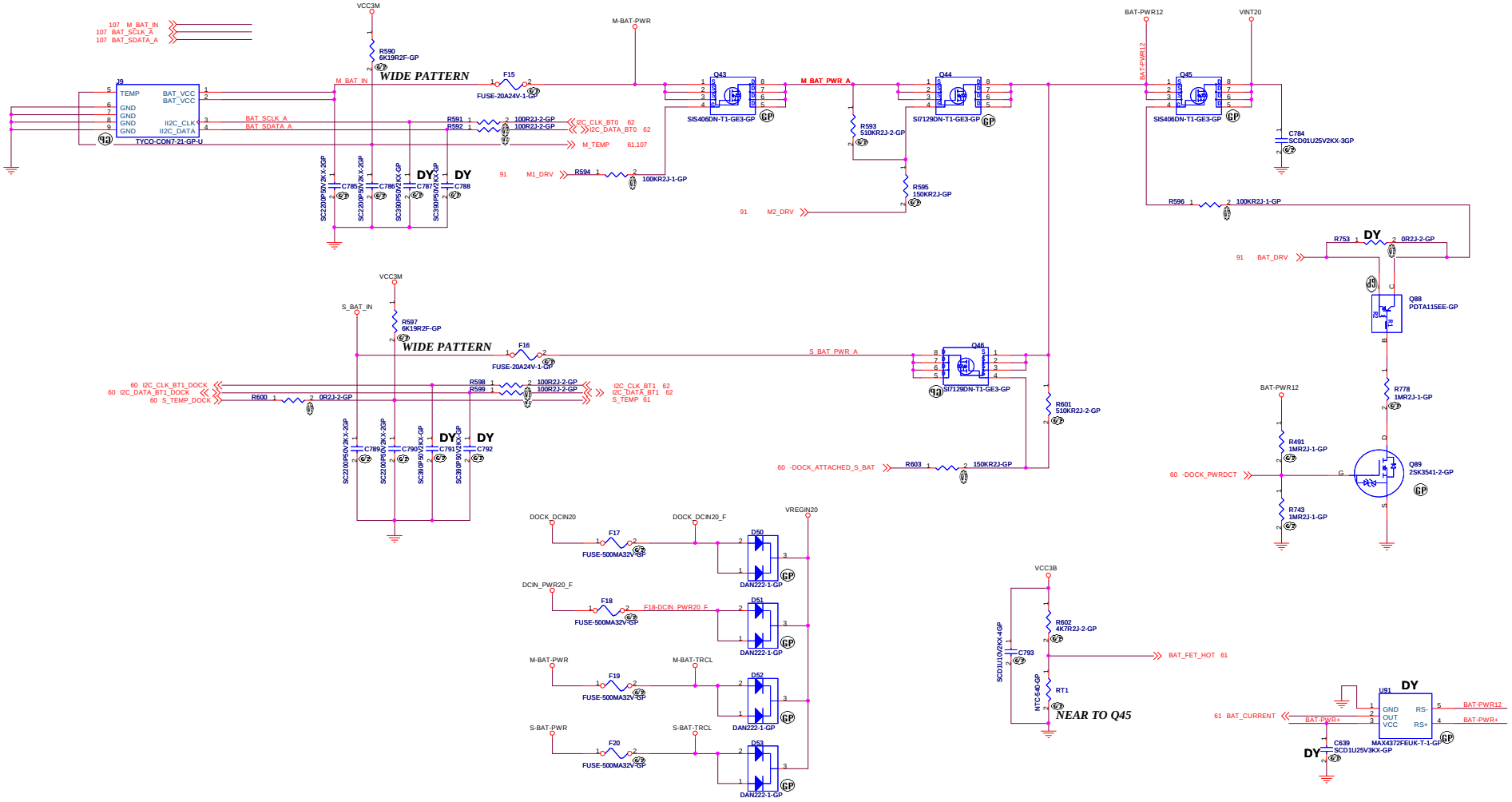

<Core Design>

緯創資通	**Wistron Corporation** 21F, 88, Sec.1, Hsin Tai Wu Rd., Hsichih, Taipei Hsien 221, Taiwan, R.O.C.	
Title	***BATTERY INPUT***	
Size A2	Document Number **Kendo-3 UMA**	Rev SE
Date: Thursday, October 07, 2010	Sheet 73 of 107	

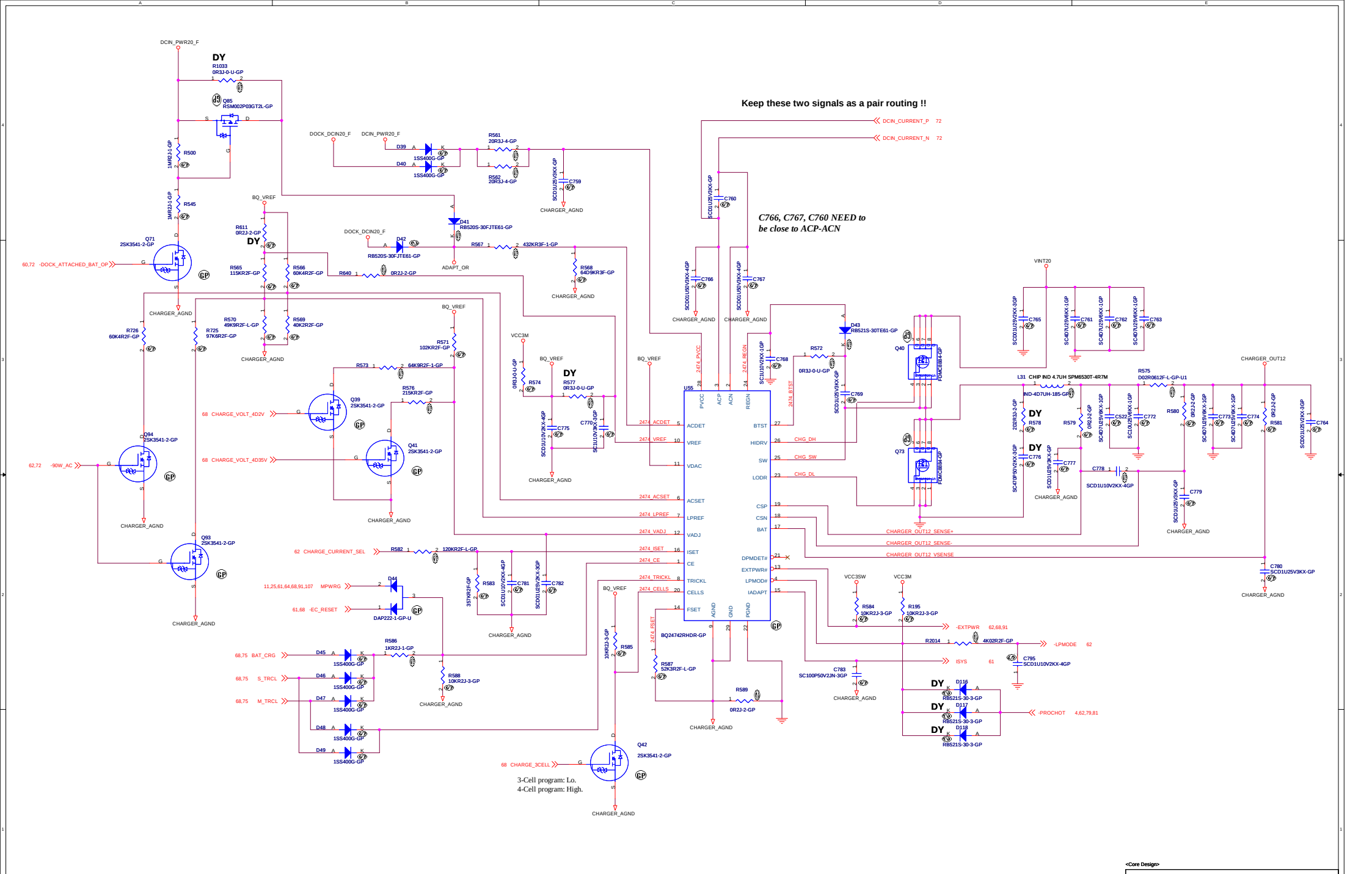

<Core Design>

緯創資通 **Wistron Corporation**
21F, 88, Sec.1, Hsin Tai Wu Rd., Hsichih, Taipei Hsien 221, Taiwan, R.O.C.

Title: **BATTERY CHARGER (BQ24742)**

Size	Document Number	Rev
A2	Kendo-3 UMA	SE

Date: Thursday, October 07, 2010 Sheet 74 of 107

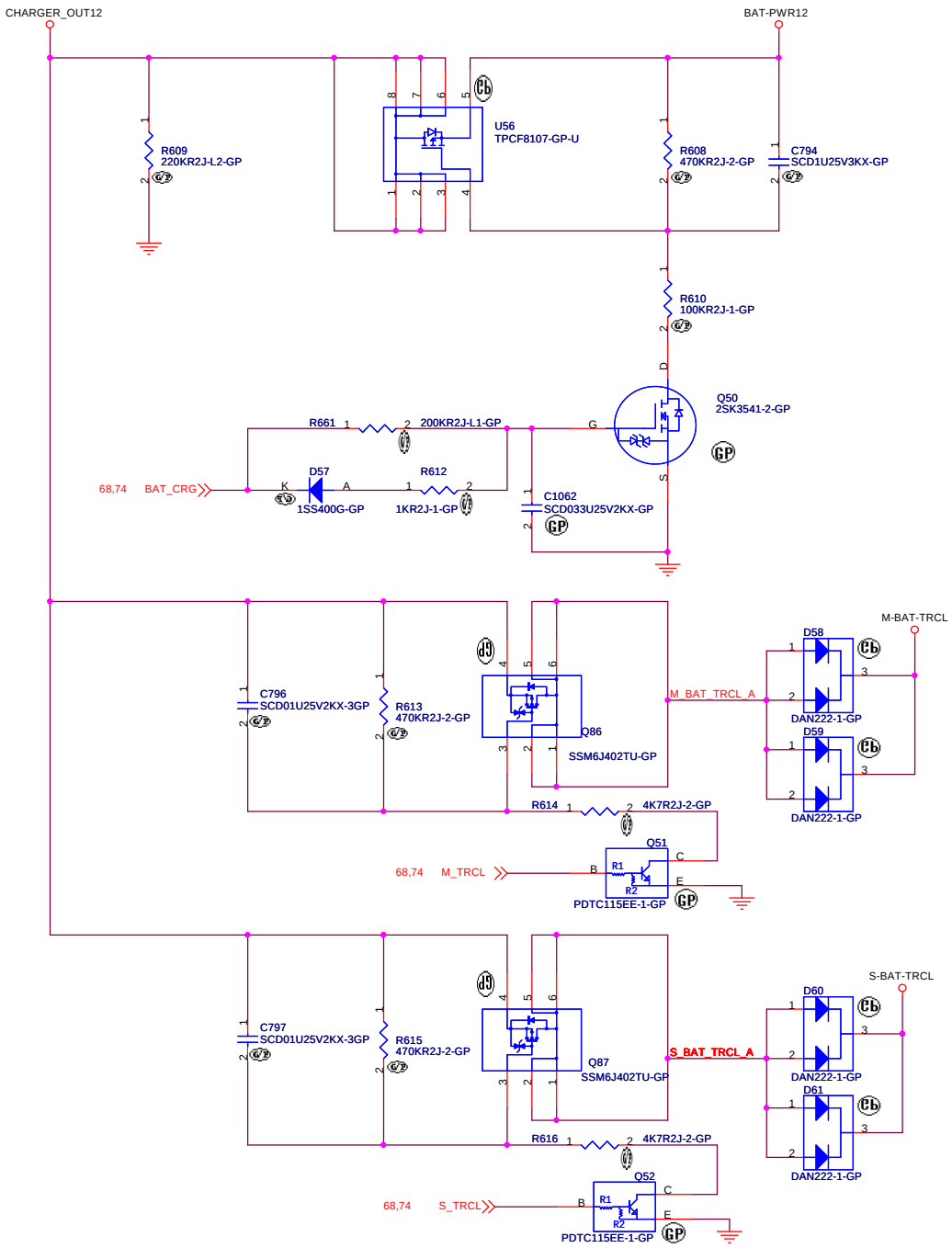

<Core Design>

緯創資通 **Wistron Corporation**
21F, 88, Sec.1, Hsin Tai Wu Rd., Hsichih,
Taipei Hsien 221, Taiwan, R.O.C.

Title: ***CHARGER SELECT***

Size	Document Number	Rev
A3	Kendo-3 UMA	SE

Date: Thursday, October 07, 2010 Sheet 75 of 107

VOUT = 0.249 (VBAT - 5)

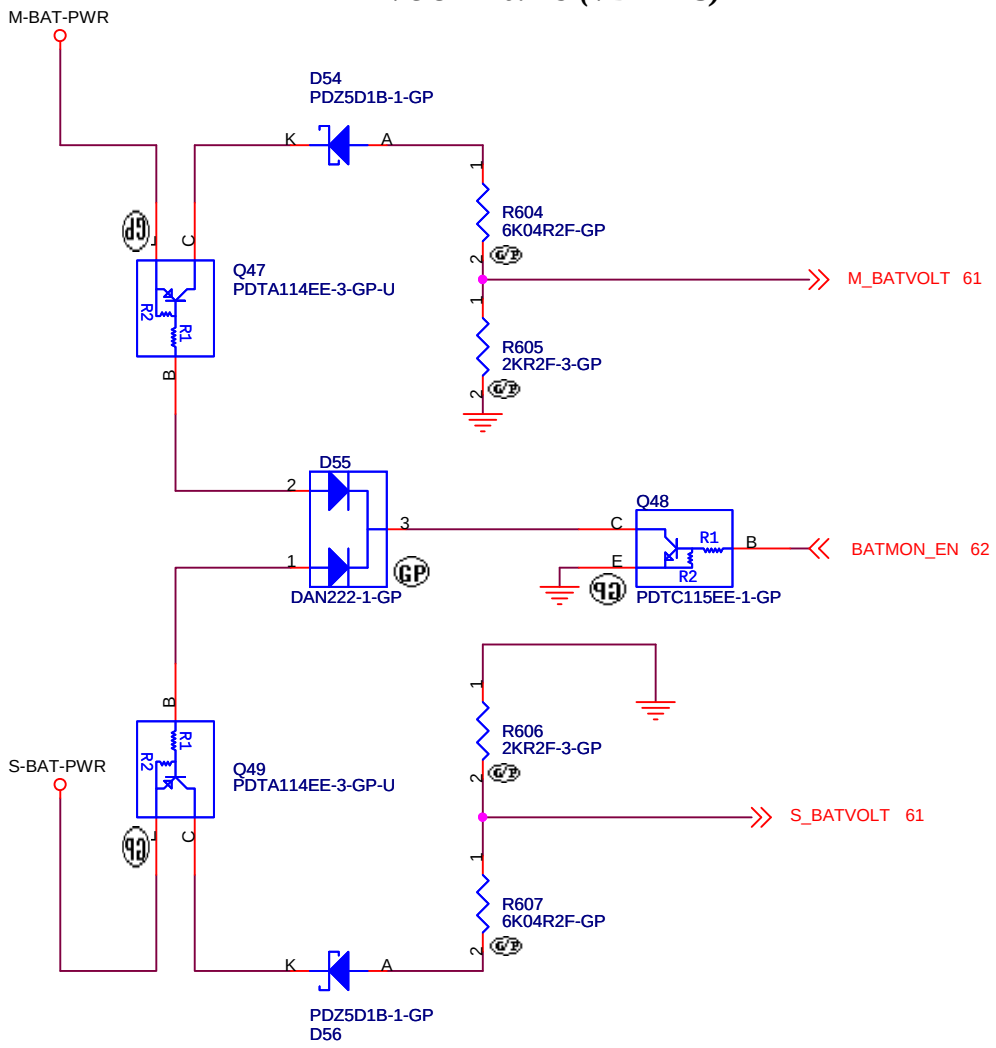

<Core Design>

緯創資通 **Wistron Corporation**
21F, 88, Sec.1, Hsin Tai Wu Rd., Hsichih,
Taipei Hsien 221, Taiwan, R.O.C.

Title: **BATTERY MONITOR**

Size	Document Number	Rev
A4	Kendo-3 UMA	SE

Date: Thursday, October 07, 2010 Sheet 76 of 107

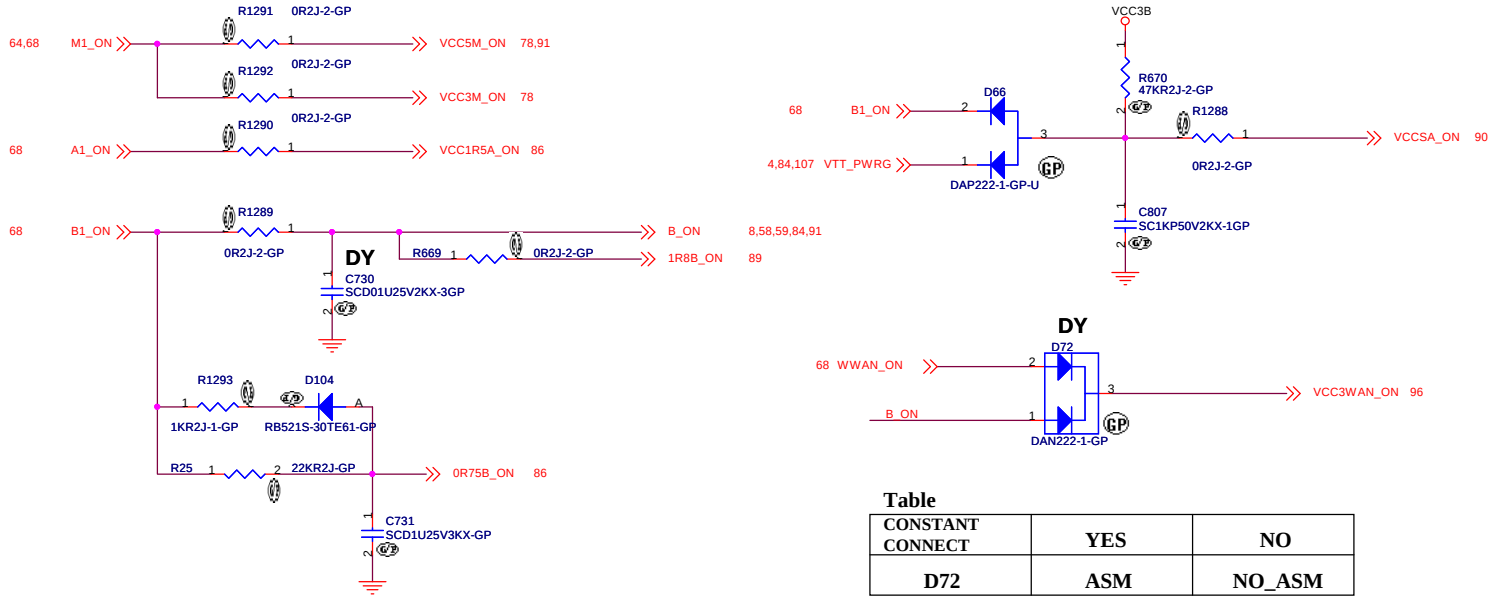

Table

CONSTANT CONNECT	YES	NO
D72	ASM	NO_ASM

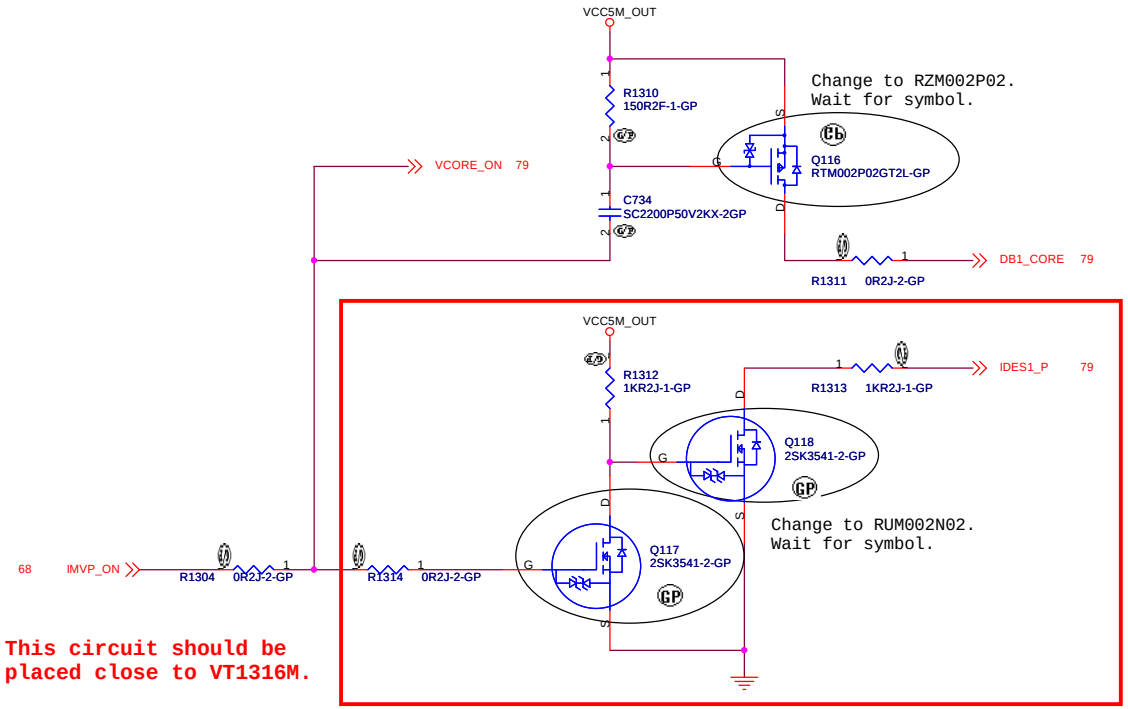

<Core Design>

Wistron Corporation
21F, 88, Sec.1, Hsin Tai Wu Rd., Hsichih, Taipei Hsien 221, Taiwan, R.O.C.

Title: POWER SEQUENCE

Size: A3 | Document Number: Kendo-3 UMA | Rev: SE

Date: Thursday, October 07, 2010 | Sheet 77 of 107

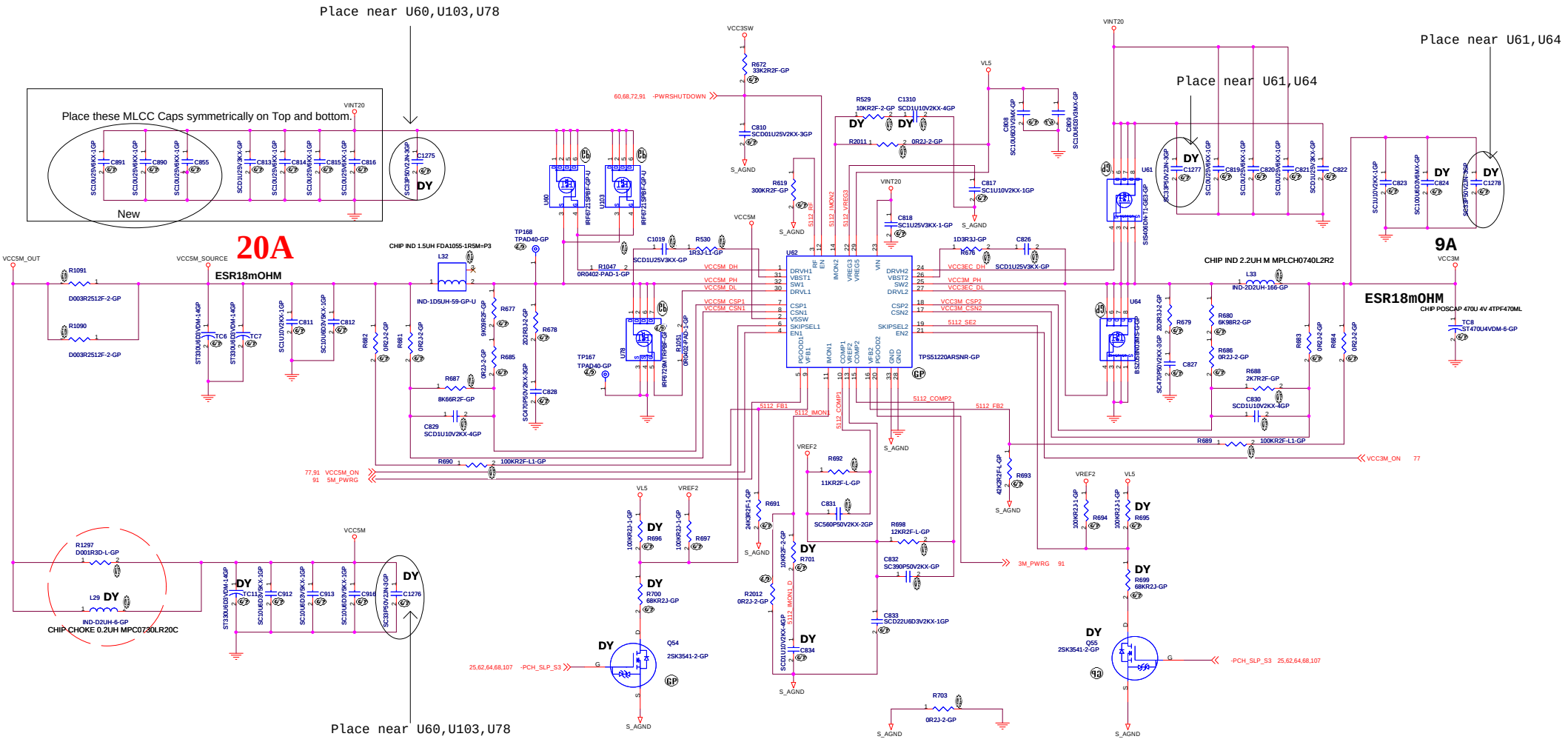

<Core Design>

Wistron Corporation
21F, 88, Sec.1, Hsin Tai Wu Rd., Hsichih,
Taipei Hsien 221, Taiwan, R.O.C.

Title: DC/DC VCC5M/VCC3M

Size	Document Number	Rev
A2	Kendo-3 UMA	SE

Date: Thursday, October 07, 2010 Sheet 78 of 107

New Circuits

Place CPU Input MLCCs symmetrically on TOP and Bottom.

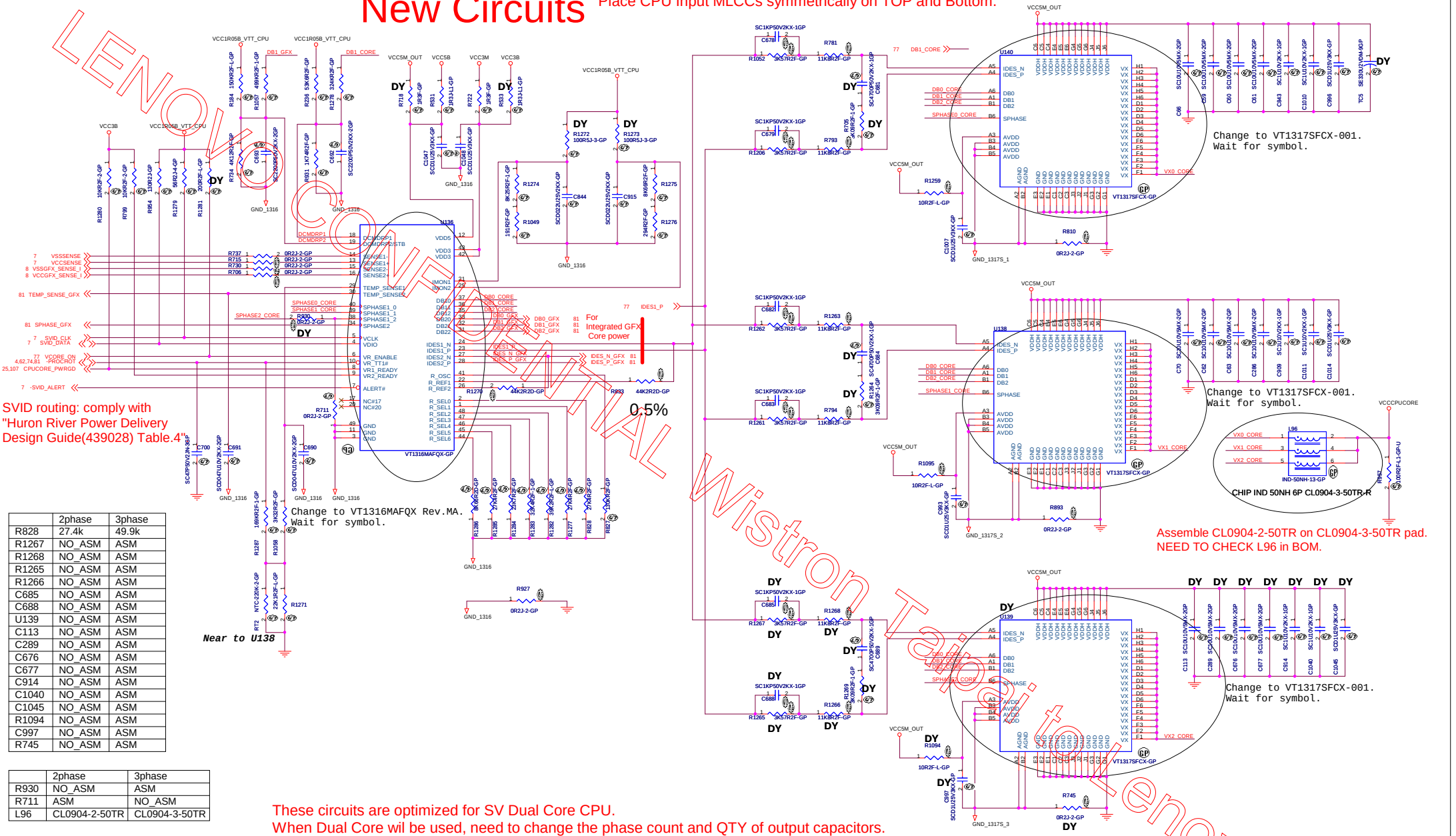

	2phase	3phase
R828	27.4k	49.9k
R1267	NO_ASM	ASM
R1268	NO_ASM	ASM
R1265	NO_ASM	ASM
R1266	NO_ASM	ASM
C685	NO_ASM	ASM
C688	NO_ASM	ASM
U139	NO_ASM	ASM
C113	NO_ASM	ASM
C289	NO_ASM	ASM
C676	NO_ASM	ASM
C677	NO_ASM	ASM
C914	NO_ASM	ASM
C1040	NO_ASM	ASM
C1045	NO_ASM	ASM
R1094	NO_ASM	ASM
C997	NO_ASM	ASM
R745	NO_ASM	ASM

	2phase	3phase
R930	NO_ASM	ASM
R711	ASM	NO_ASM
L96	CL0904-2-50TR	CL0904-3-50TR

These circuits are optimized for SV Dual Core CPU.
When Dual Core wil be used, need to change the phase count and QTY of output capacitors.

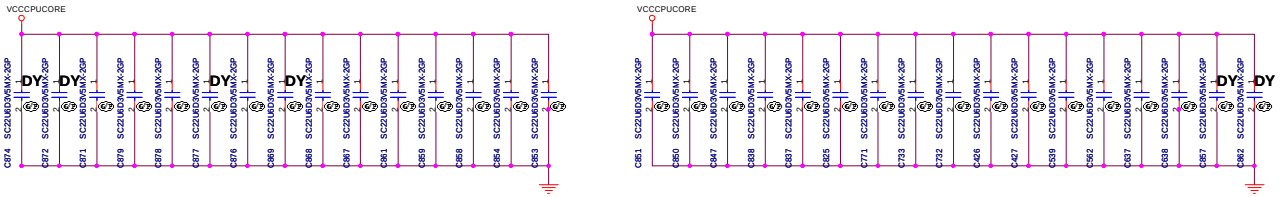

LENOVO CONFIDENTIAL
Wistron Taipei
Lenovo Japan

Wistron Corporation
21F, 88, Sec.1, Hsin Tai Wu Rd., Hsichih, Taipei Hsien 221, Taiwan, R.O.C.

Title: DC/DC VCCCPUCORE

Size: A2 | Document Number: Kendo-3 UMA | Rev: SE

Date: Thursday, October 07, 2010 | Sheet 79 of 107

BLANK

<Variant Name>

緯創資通 Wistron Corporation
21F, 88, Sec.1, Hsin Tai Wu Rd., Hsichih,
Taipei Hsien 221, Taiwan, R.O.C.

Title	BLANK	
Size A4	Document Number Kendo-3 UMA	Rev SE
Date: Thursday, October 07, 2010	Sheet 80 of 107	

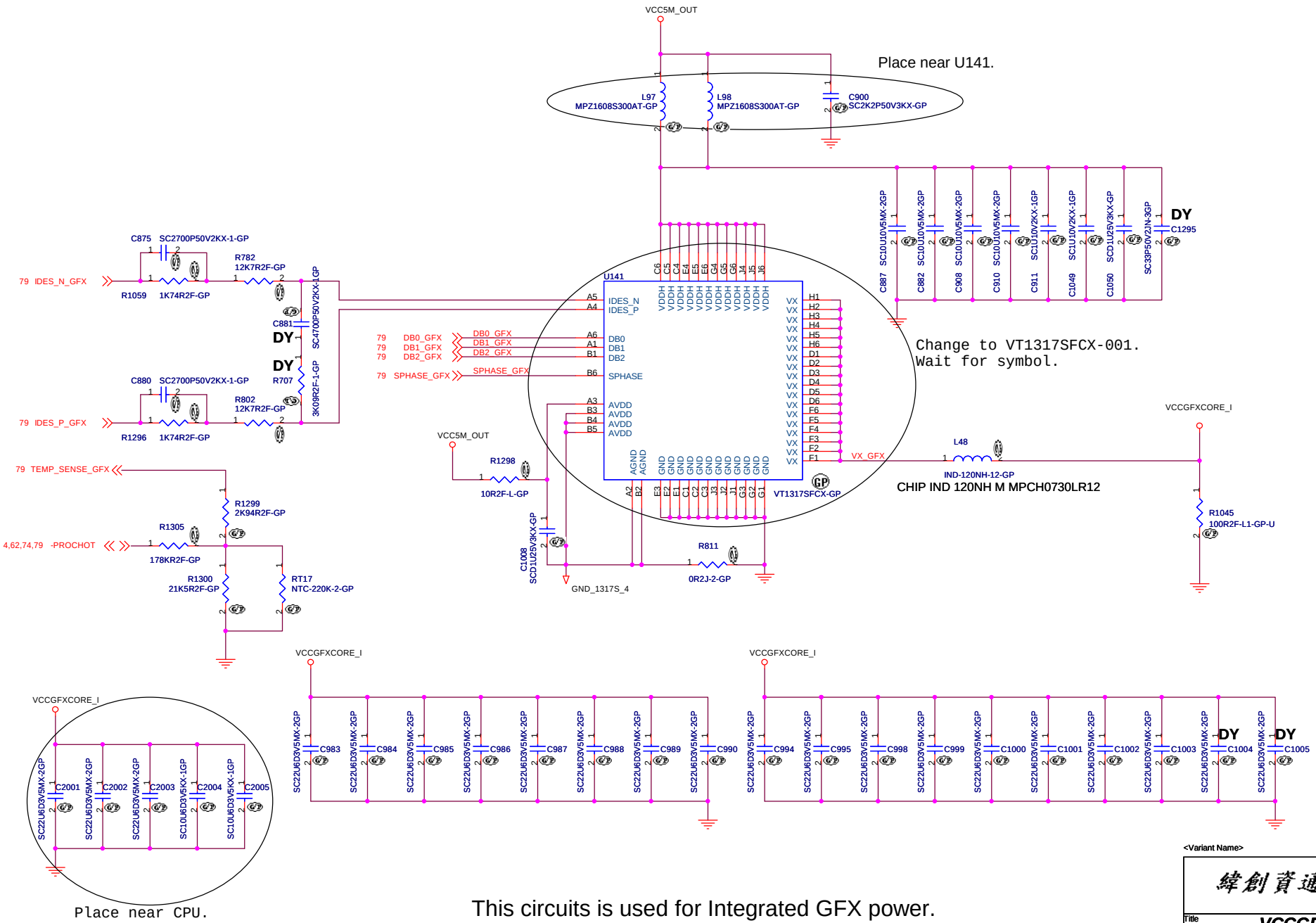

This circuits is used for Integrated GFX power.
If Integrated GFX does not use, No need to assemble.

<Variant Name>

緯創資通	**Wistron Corporation** 21F, 88, Sec.1, Hsin Tai Wu Rd., Hsichih, Taipei Hsien 221, Taiwan, R.O.C.	
Title	***VCCGFXCRE_I***	
Size A3	Document Number **Kendo-3 UMA**	Rev **SE**
Date: Thursday, October 07, 2010	Sheet 81 of 107	

BLANK

<Variant Name>

緯創資通 Wistron Corporation
21F, 88, Sec.1, Hsin Tai Wu Rd., Hsichih,
Taipei Hsien 221, Taiwan, R.O.C.

Title	***BLANK***	
Size A4	Document Number **Kendo-3 UMA**	Rev **SE**
Date: Thursday, October 07, 2010	Sheet 82 of 107	

<Core Design>

緯創資通	**Wistron Corporation** 21F, 88, Sec.1, Hsin Tai Wu Rd., Hsichih, Taipei Hsien 221, Taiwan, R.O.C.	
Title	***BLANK***	
Size A4	Document Number **Kendo-3 UMA**	Rev **SE**
Date: Thursday, October 07, 2010	Sheet 83 of 107	

VOUT	Parameter
1.10V	R_VDES = 40.2K
1.05V	R_VDES = 38.3K
VOUT = 1.212 x R_VDES / 44.2K	

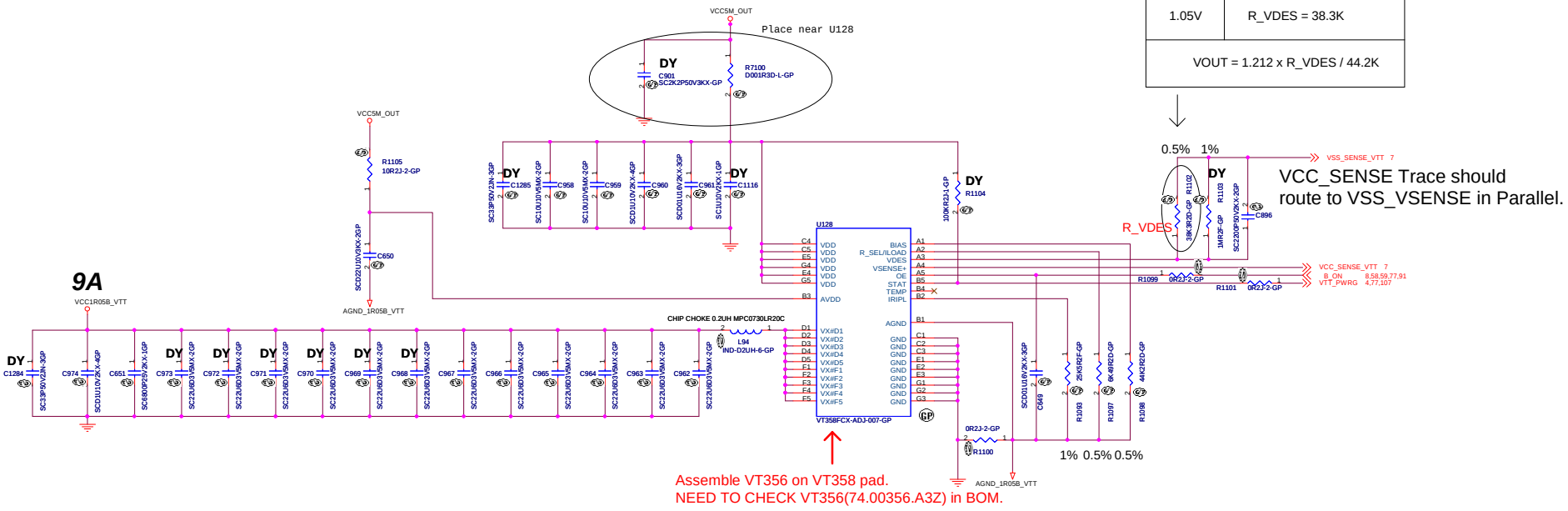

VCC_SENSE Trace should route to VSS_VSENSE in Parallel.

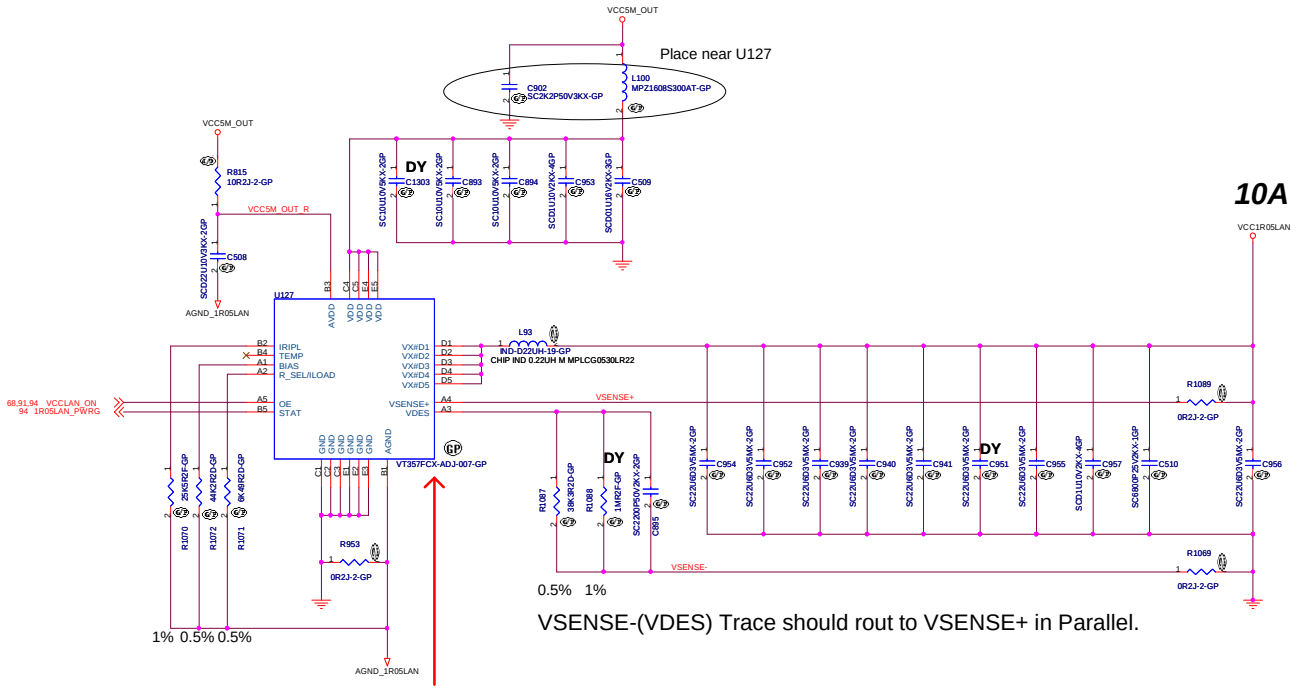

<Core Design>

緯創資通	**Wistron Corporation** 21F, 88, Sec.1, Hsin Tai Wu Rd., Hsichih, Taipei Hsien 221, Taiwan, R.O.C.	
Title	***VT357 VCC1R05LAN***	
Size A2	Document Number **Kendo-3 UMA**	Rev **SE**
Date: Thursday, October 07, 2010	Sheet 85 of 107	

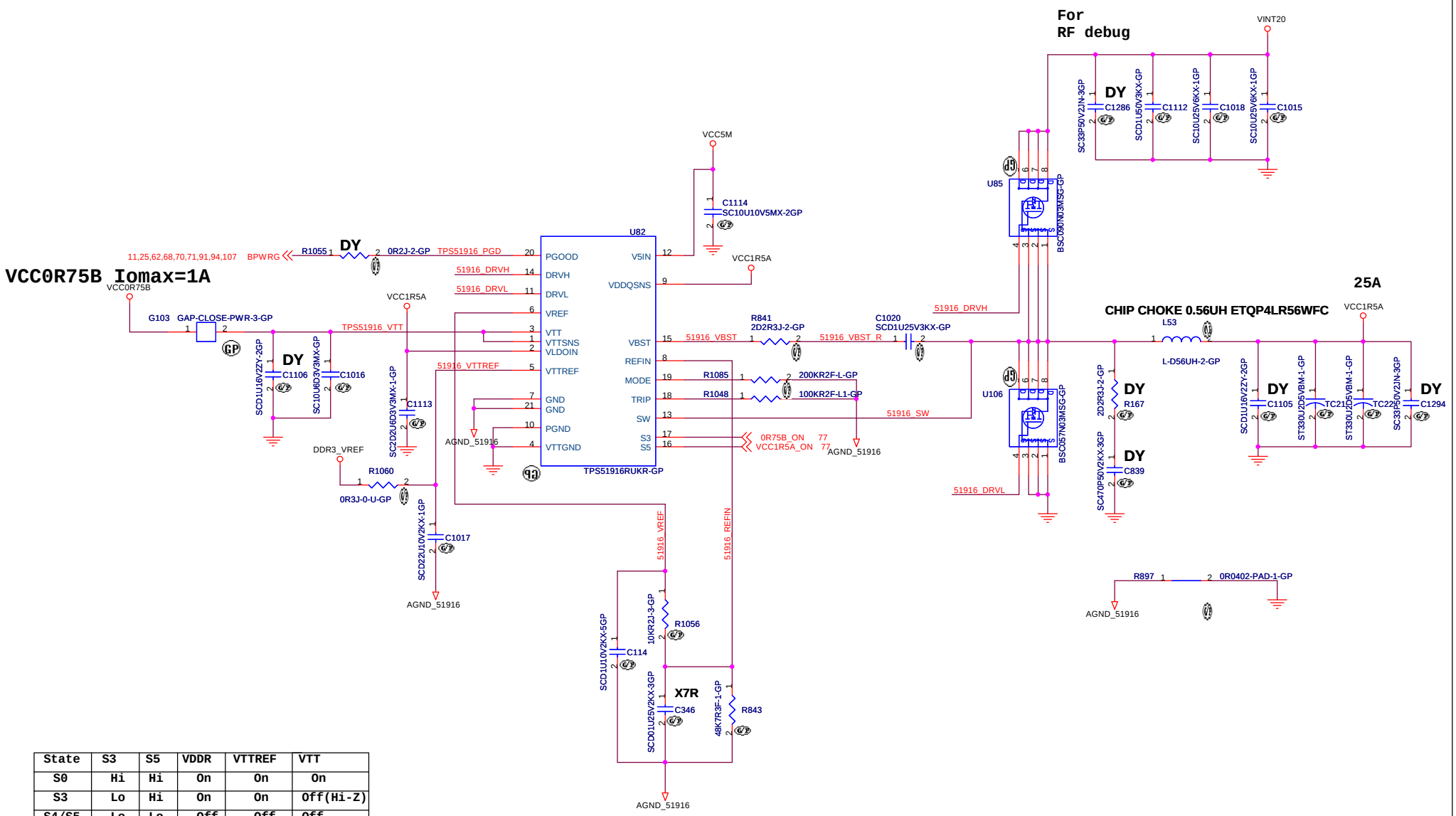

State	S3	S5	VDDR	VTTREF	VTT
S0	Hi	Hi	On	On	On
S3	Lo	Hi	On	On	Off(Hi-Z)
S4/S5	Lo	Lo	Off	Off	Off

<Core Design>

Wistron Corporation
21F, 88, Sec.1, Hsin Tai Wu Rd., Hsichih, Taipei Hsien 221, Taiwan, R.O.C.

Title: DC/DC VCC1R5A/VCC0R75B

Size: A3 | Document Number: Kendo-3 UMA | Rev: SE

Date: Thursday, October 07, 2010 | Sheet 86 of 107

<Variant Name>

緯創資通 **Wistron Corporation**
21F, 88, Sec.1, Hsin Tai Wu Rd., Hsichih,
Taipei Hsien 221, Taiwan, R.O.C.

Title ***BLANK***

Size	Document Number	Rev
A4	**Kendo-3 UMA**	**SE**

Date: Thursday, October 07, 2010 Sheet 87 of 107

<Core Design>

緯創資通 **Wistron Corporation**
21F, 88, Sec.1, Hsin Tai Wu Rd., Hsichih,
Taipei Hsien 221, Taiwan, R.O.C.

Title
BLANK

Size	Document Number	Rev
A4	**Kendo-3 UMA**	**SE**

Date: Thursday, October 07, 2010 Sheet 88 of 107

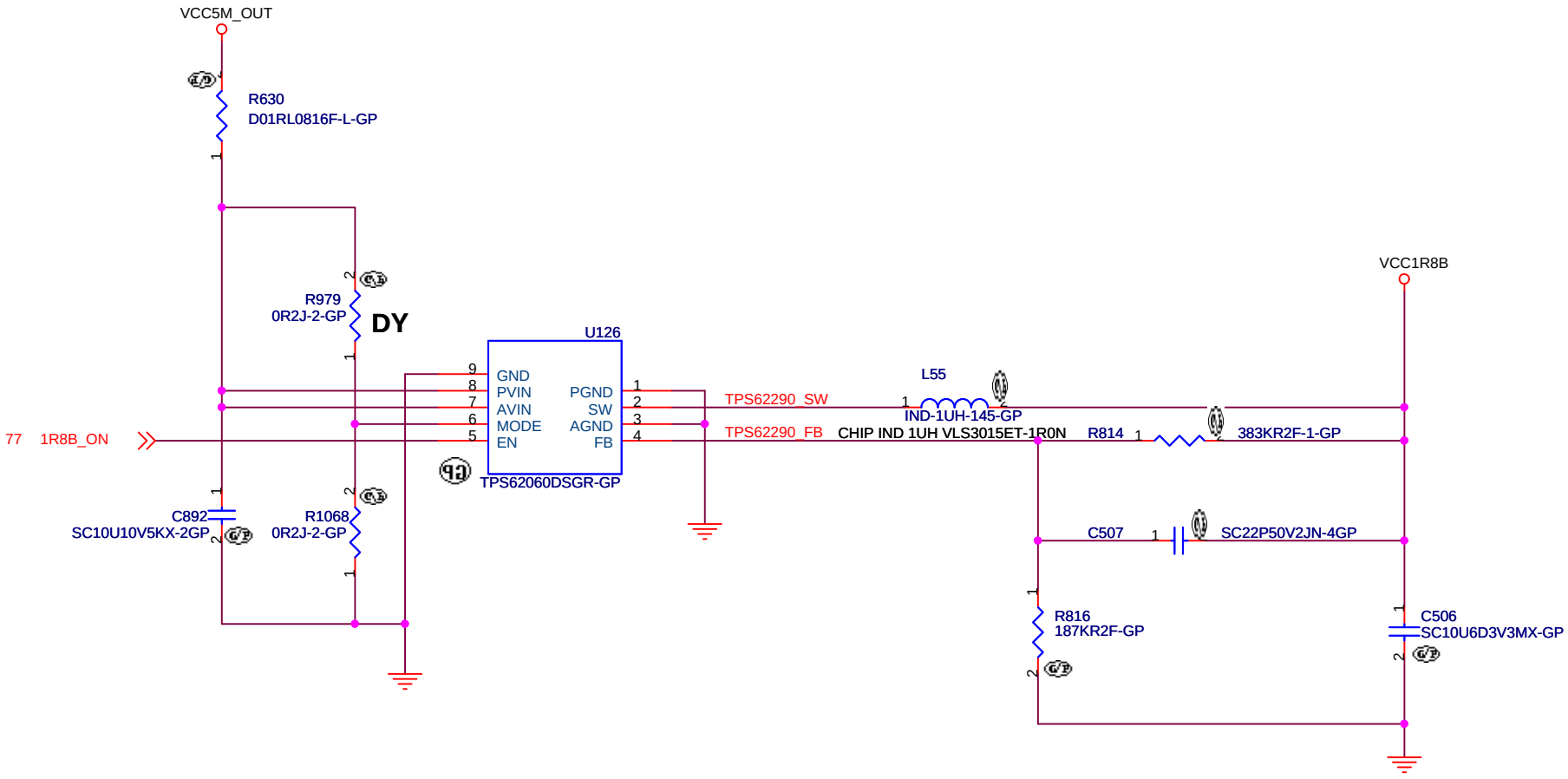

<Core Design>

緯創資通 **Wistron Corporation**
21F, 88, Sec.1, Hsin Tai Wu Rd., Hsichih,
Taipei Hsien 221, Taiwan, R.O.C.

Title: ***DC-DC VCC1R8B***

Size	Document Number	Rev
A4	**Kendo-3 UMA**	**SE**

Date: Thursday, October 07, 2010 Sheet 89 of 107

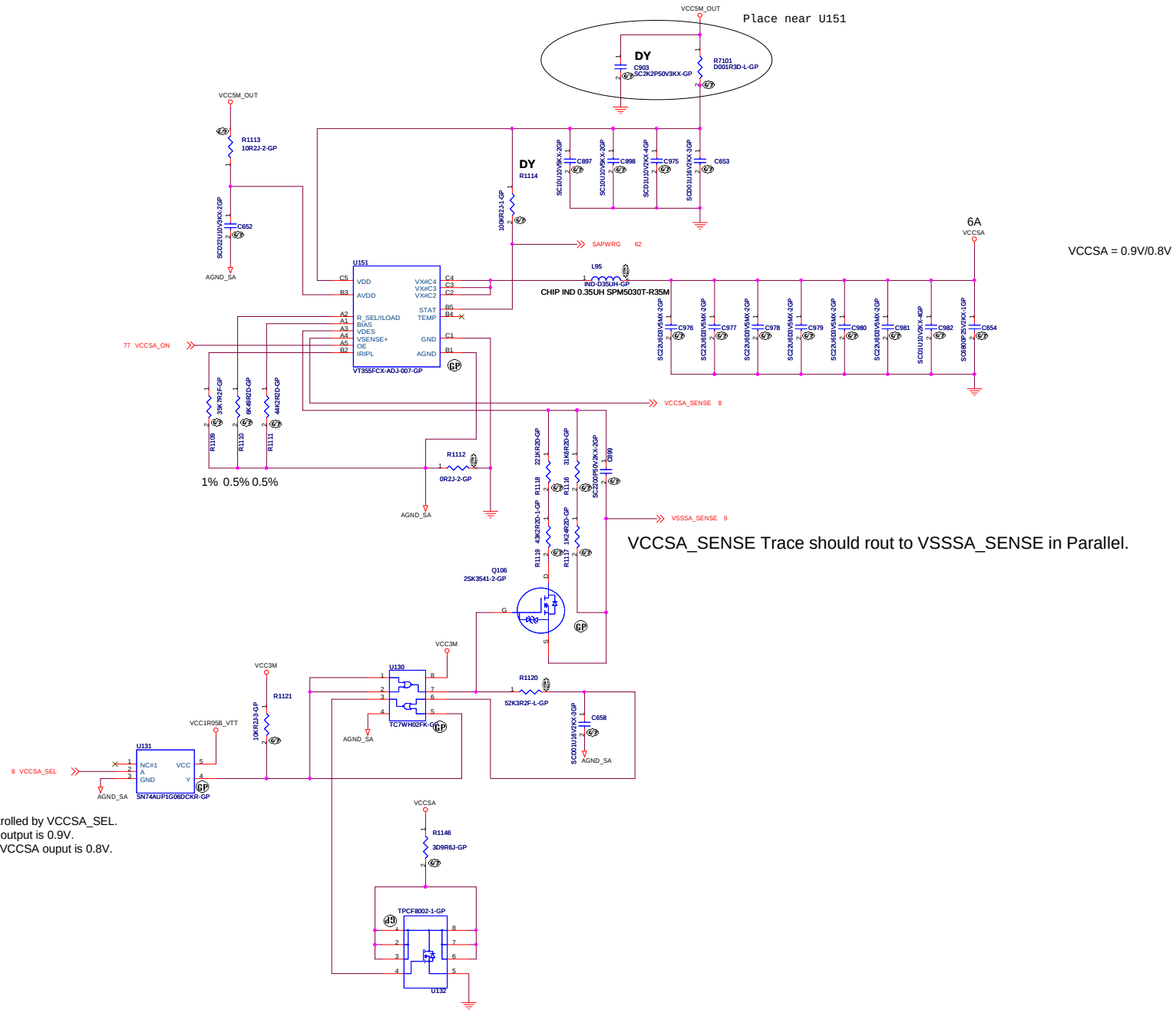

VCCSA power output is controlled by VCCSA_SEL.
This signal is Low : VCCSA output is 0.9V.
This signal is high (1.05V) : VCCSA ouput is 0.8V.

<Variant Name>

緯創資通 **Wistron Corporation**
21F, 88, Sec.1, Hsin Tai Wu Rd., Hsichih,
Taipei Hsien 221, Taiwan, R.O.C.

Title: ***DC/DC VCC_SA***

Size	Document Number	Rev
A2	Kendo-3 UMA	SE

Date: Thursday, October 07, 2010 Sheet 90 of 107

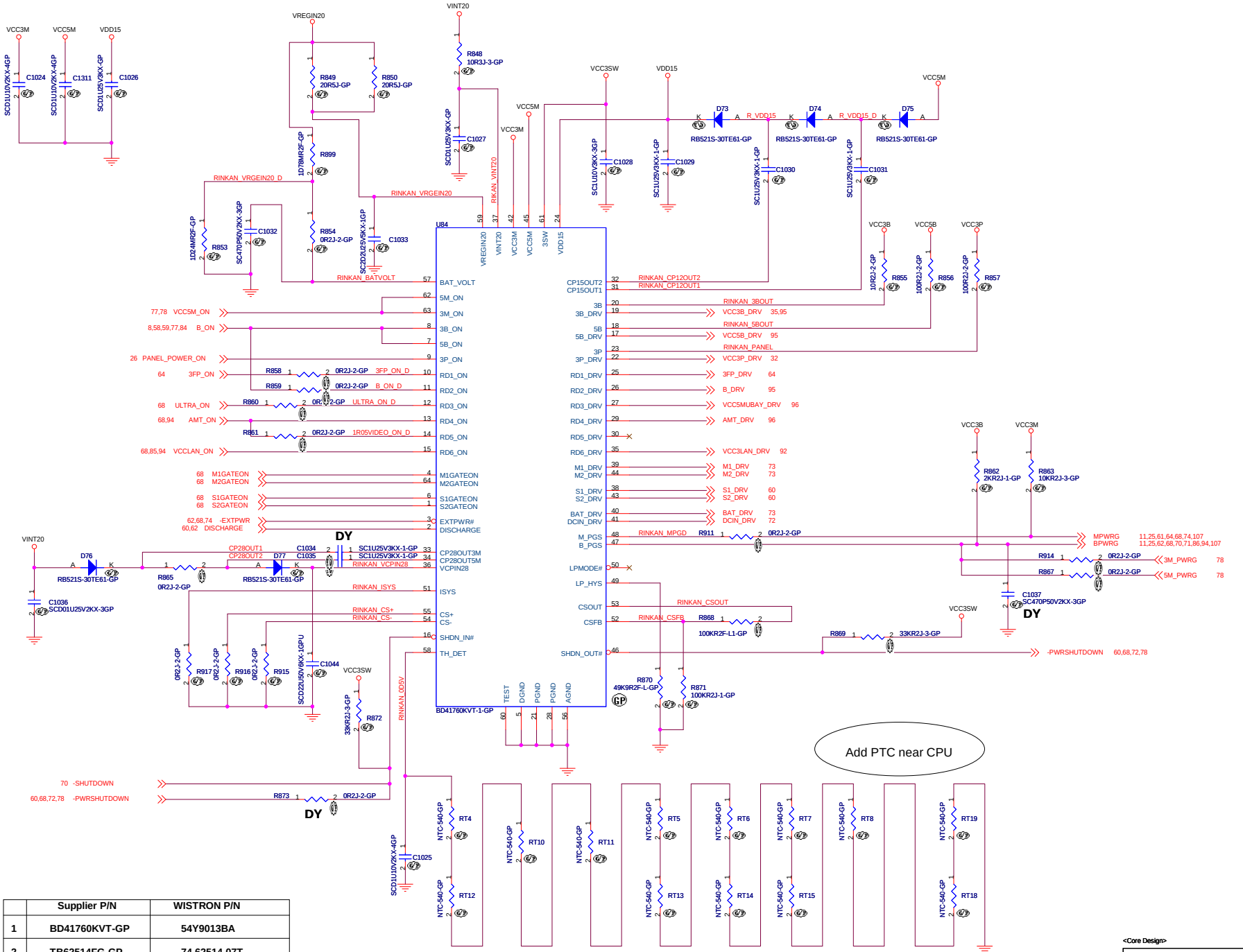

	Supplier P/N	WISTRON P/N
1	BD41760KVT-GP	54Y9013BA
2	TB62514FG-GP	74.62514.07T

<Core Design>

緯創資通 **Wistron Corporation**
21F, 88, Sec.1, Hsin Tai Wu Rd., Hsichih,
Taipei Hsien 221, Taiwan, R.O.C.

Title: ***DC/DC RINKAN-2***

Size: Custom | Document Number: **Kendo-3 UMA** | Rev: **SE**

Date: Thursday, October 07, 2010 | Sheet 91 of 107

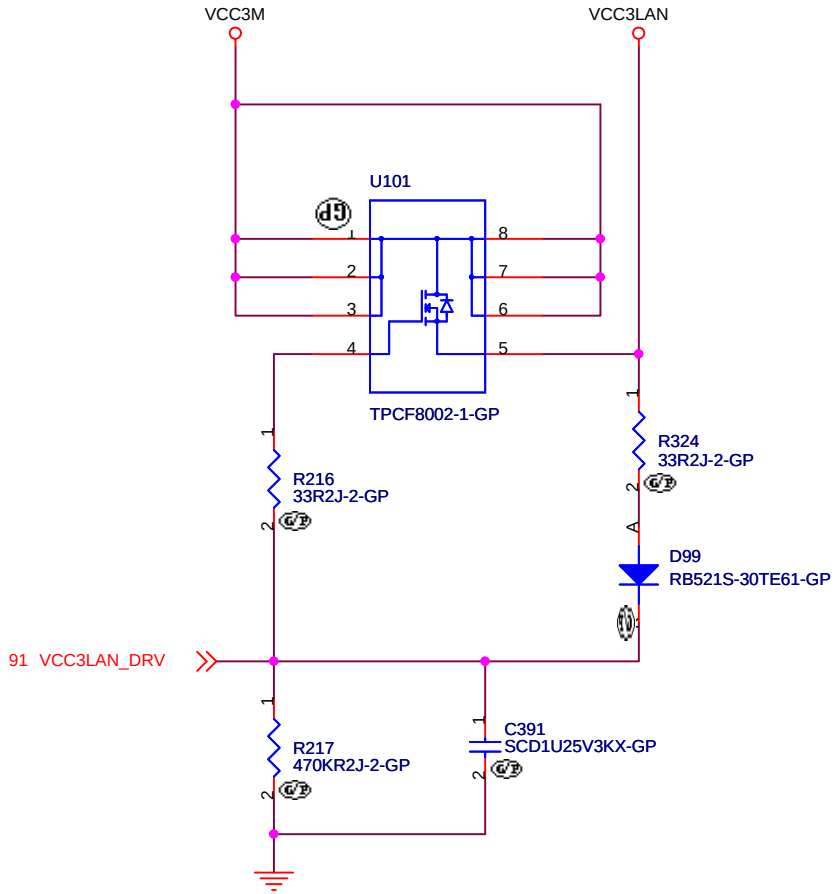

<Core Design>

緯創資通 **Wistron Corporation**
21F, 88, Sec.1, Hsin Tai Wu Rd., Hsichih,
Taipei Hsien 221, Taiwan, R.O.C.

Title: ***LOAD SW LAN/LANPWRG***

Size	Document Number	Rev
A4	**Kendo-3 UMA**	SE

Date: Thursday, October 07, 2010 Sheet 92 of 107

<Core Design>

緯創資通 **Wistron Corporation**
21F, 88, Sec.1, Hsin Tai Wu Rd., Hsichih,
Taipei Hsien 221, Taiwan, R.O.C.

Title
BLANK

Size	Document Number	Rev
A4	**Kendo-3 UMA**	**SE**

Date: Thursday, October 07, 2010 Sheet 93 of 107

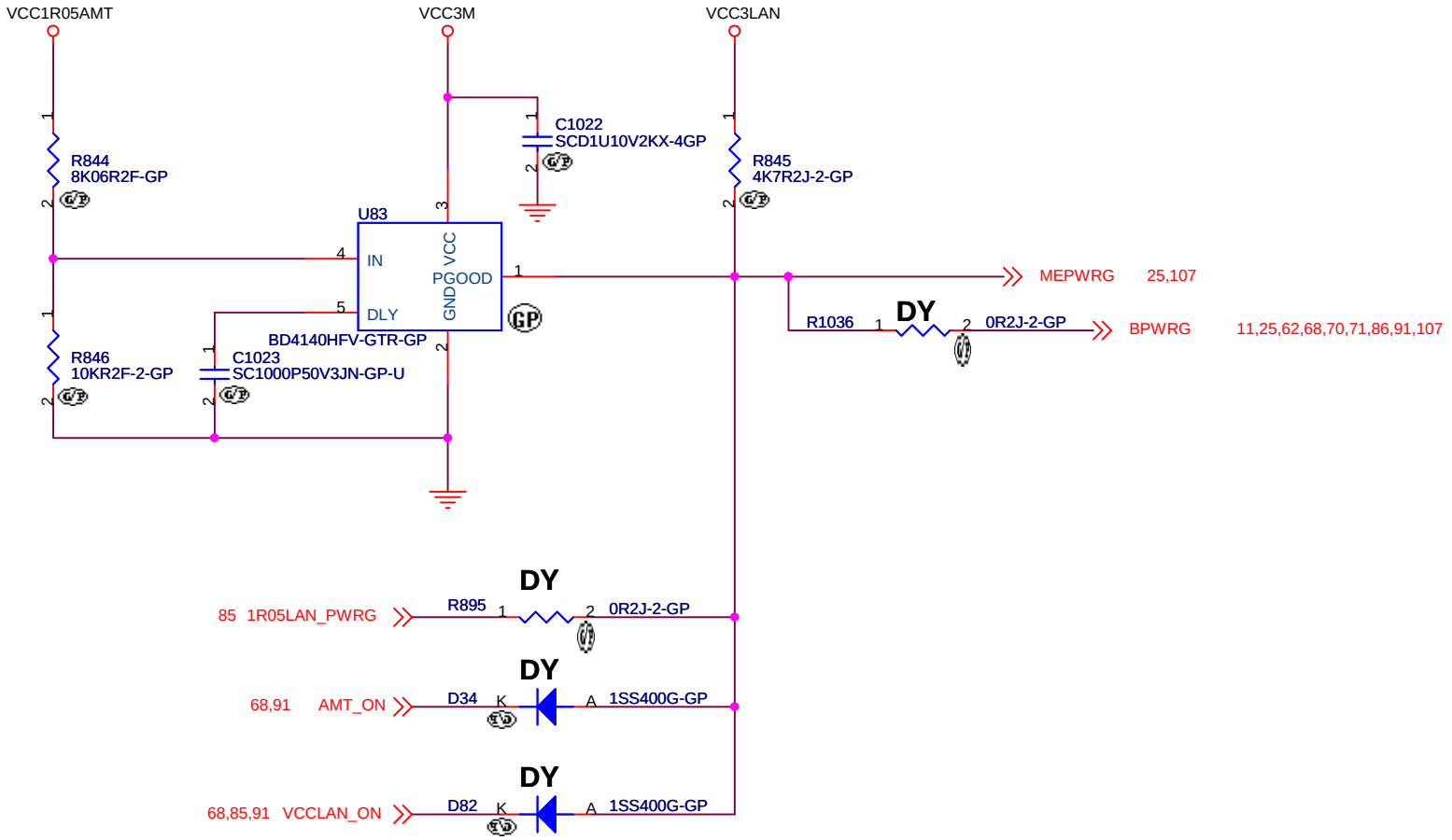

<Core Design>

緯創資通 **Wistron Corporation**
21F, 88, Sec.1, Hsin Tai Wu Rd., Hsichih,
Taipei Hsien 221, Taiwan, R.O.C.

Title: ***MEPWRG***

Size	Document Number	Rev
A4	**Kendo-3 UMA**	**SE**

Date: Thursday, October 07, 2010 Sheet 94 of 107

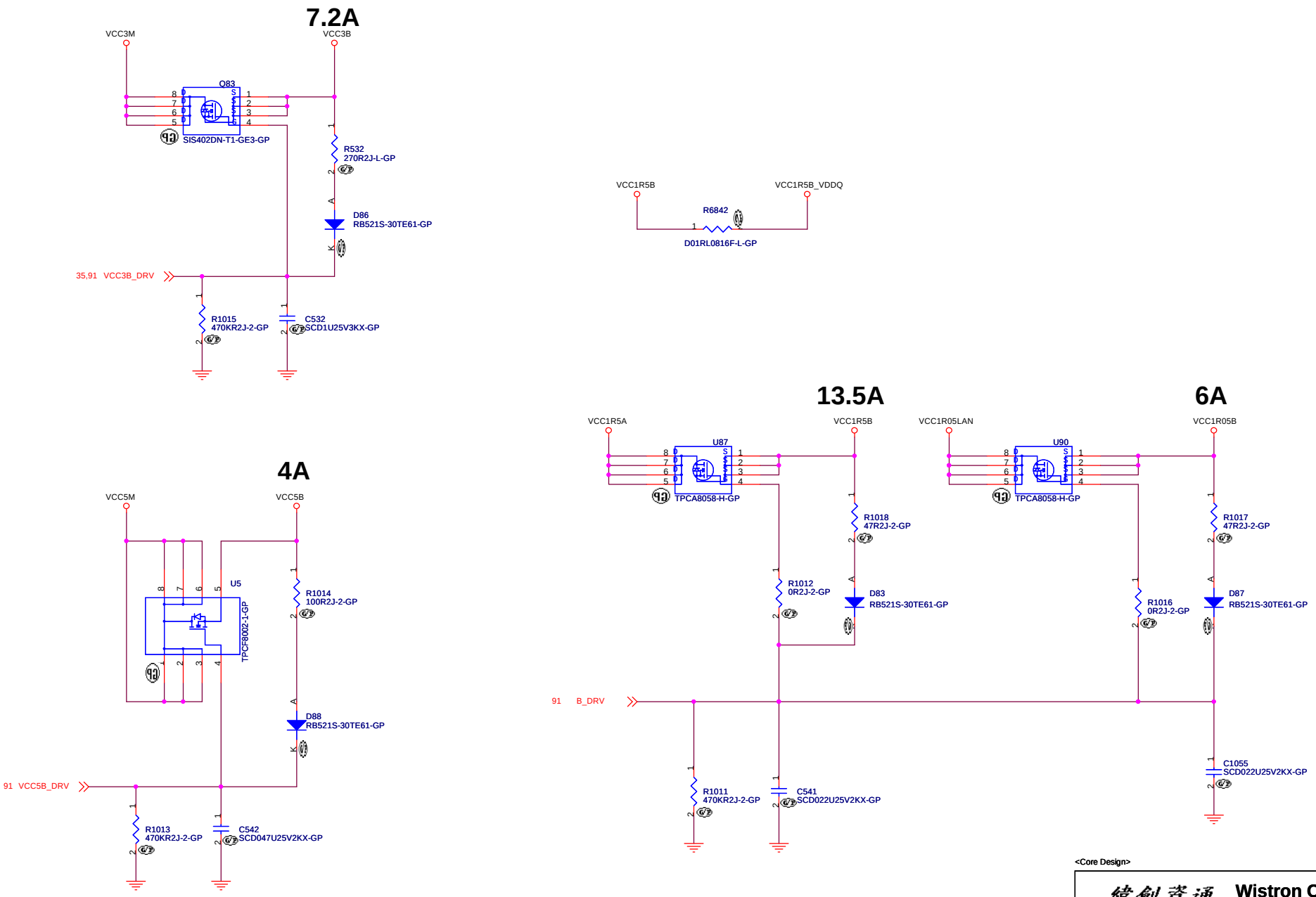

<Core Design>

緯創資通	**Wistron Corporation** 21F, 88, Sec.1, Hsin Tai Wu Rd., Hsichih, Taipei Hsien 221, Taiwan, R.O.C.
Title	***LOAD SW B***
Size A3	Document Number **Kendo-3 UMA** Rev **SE**
Date: Thursday, October 07, 2010	Sheet 95 of 107

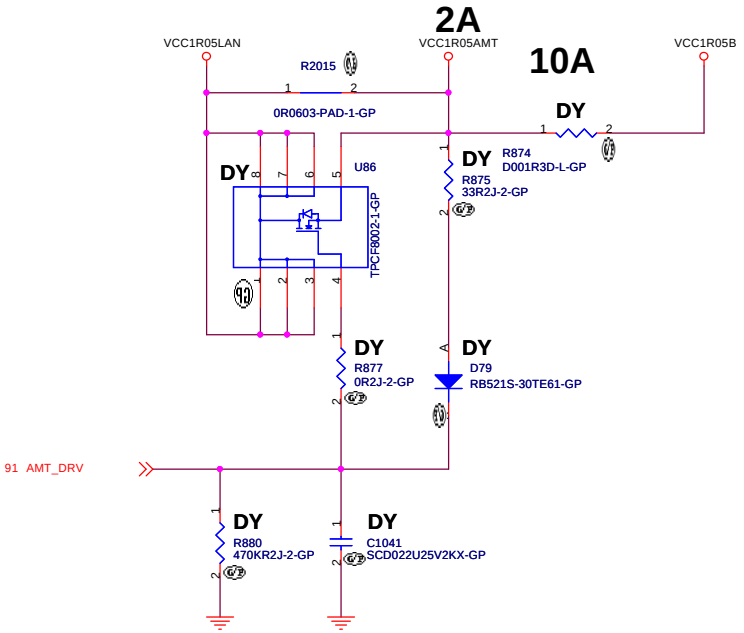

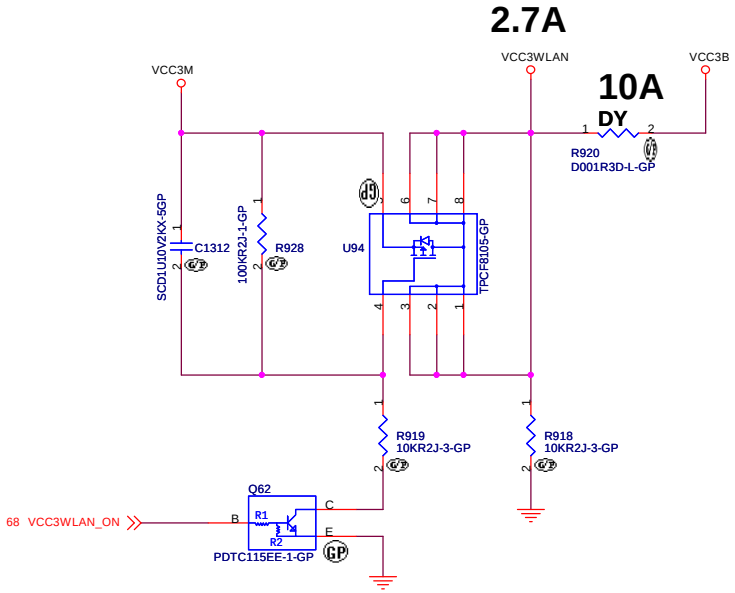

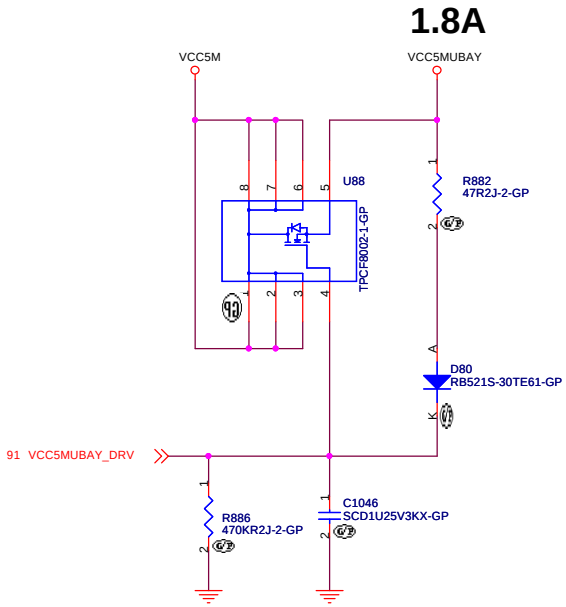

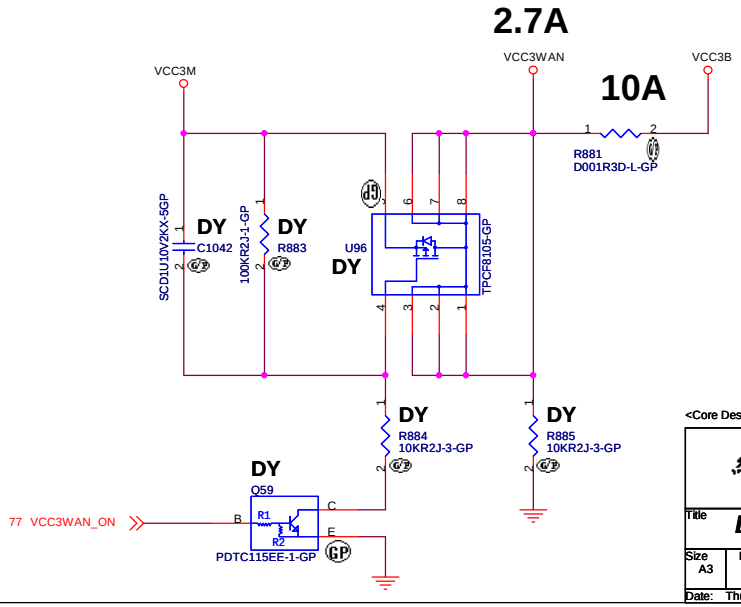

	REG/LITE	BB/NO
R881	NO-ASM	ASM
U96	ASM	NO-ASM
R885	ASM	NO-ASM
R883	ASM	NO-ASM
C1042	ASM	NO-ASM
R884	ASM	NO-ASM
Q59	ASM	NO-ASM

<Core Design>

緯創資通 Wistron Corporation
21F, 88, Sec.1, Hsin Tai Wu Rd., Hsichih,
Taipei Hsien 221, Taiwan, R.O.C.

Title: **LOAD SW VCC5MUBAY**

Size: A3 | Document Number: **Kendo-3 UMA** | Rev: SE

Date: Thursday, October 07, 2010 | Sheet 96 of 107

BLANK

<Variant Name>

緯創資通 **Wistron Corporation**
21F, 88, Sec.1, Hsin Tai Wu Rd., Hsichih,
Taipei Hsien 221, Taiwan, R.O.C.

Title	***BLANK***	
Size A4	Document Number **Kendo-3 UMA**	Rev **SE**
Date: Thursday, October 07, 2010	Sheet 97 of 107	

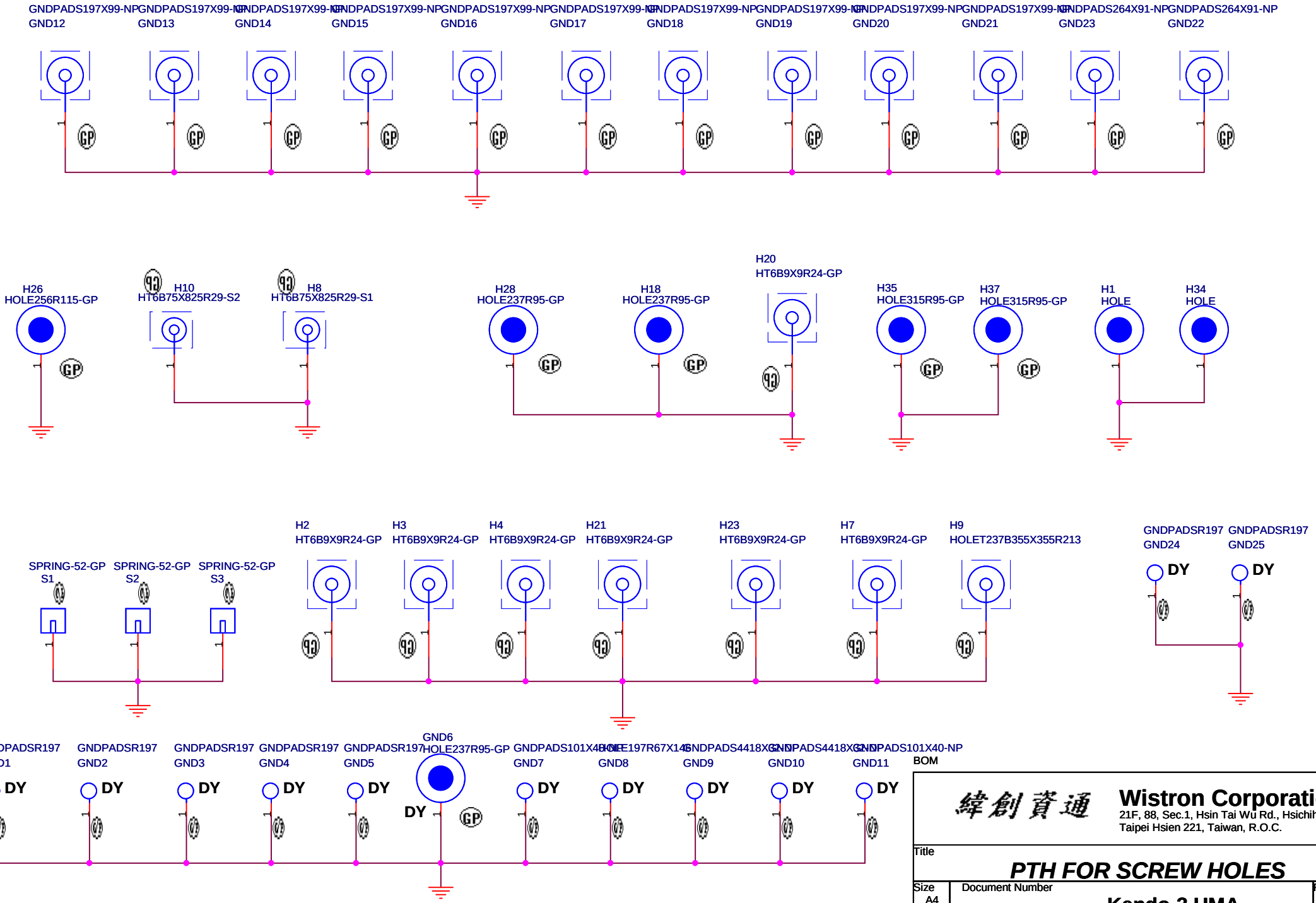

BOM

緯創資通 **Wistron Corporation**
21F, 88, Sec.1, Hsin Tai Wu Rd., Hsichih,
Taipei Hsien 221, Taiwan, R.O.C.

Title: ***PTH FOR SCREW HOLES***

Size	Document Number	Rev
A4	**Kendo-3 UMA**	**SE**

Date: Thursday, October 07, 2010 Sheet 98 of 107

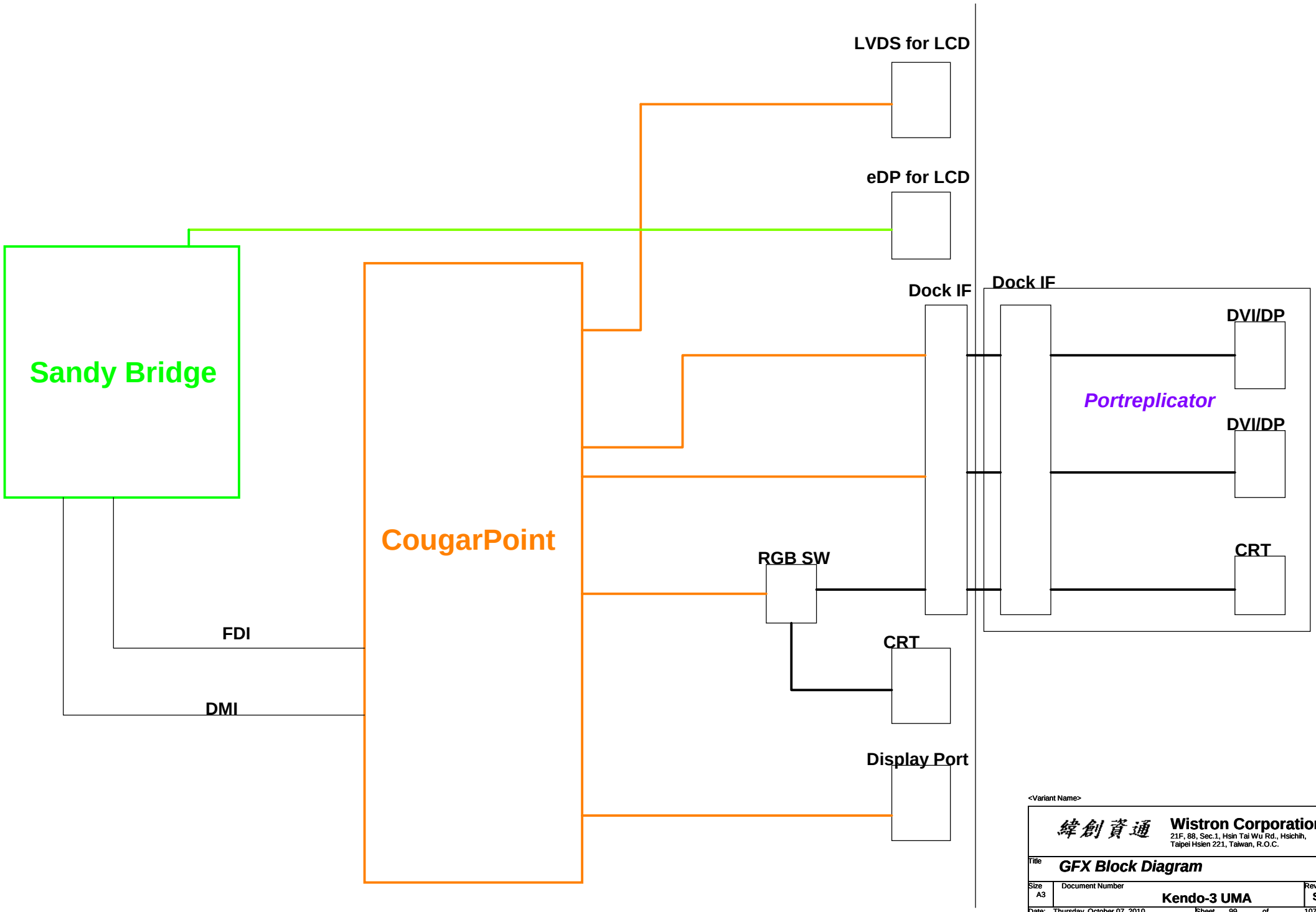

<Variant Name>

緯創資通 **Wistron Corporation**
21F, 88, Sec.1, Hsin Tai Wu Rd., Hsichih,
Taipei Hsien 221, Taiwan, R.O.C.

Title: ***GFX Block Diagram***

Size	Document Number	Rev
A3	Kendo-3 UMA	SE

Date: Thursday, October 07, 2010 Sheet 99 of 107

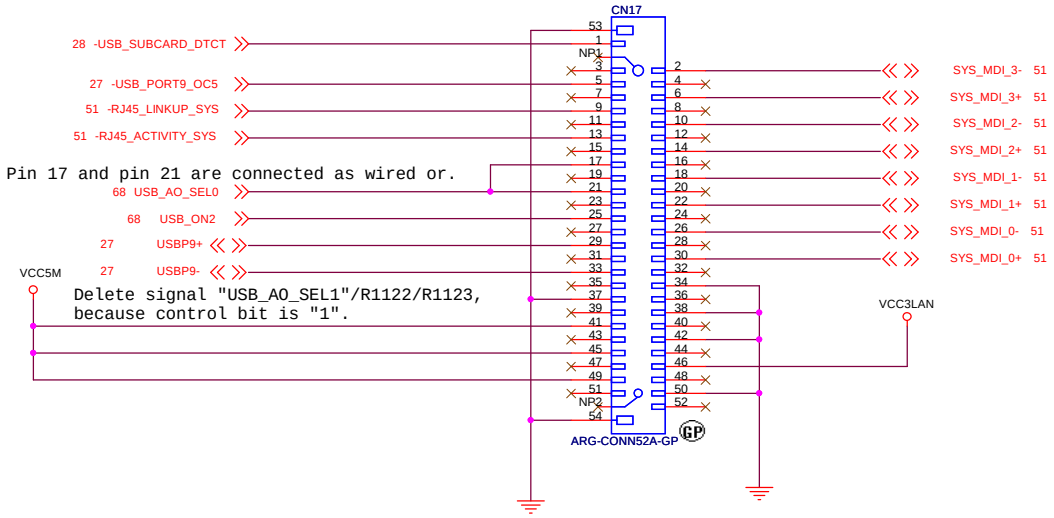

<Variant Name>

緯創資通	**Wistron Corporation** 21F, 88, Sec.1, Hsin Tai Wu Rd., Hsichih, Taipei Hsien 221, Taiwan, R.O.C.
Title	***USB BOARD CONN***
Size A3	Document Number **Kendo-3 UMA** Rev **SE**
Date: Thursday, October 07, 2010	Sheet 100 of 107

BLANK

<Variant Name>

緯創資通 Wistron Corporation
21F, 88, Sec.1, Hsin Tai Wu Rd., Hsichih,
Taipei Hsien 221, Taiwan, R.O.C.

Title	BLANK	
Size A4	Document Number Kendo-3 UMA	Rev SE
Date: Thursday, October 07, 2010	Sheet 101 of 107	

BLANK

<Variant Name>

緯創資通 Wistron Corporation
21F, 88, Sec.1, Hsin Tai Wu Rd., Hsichih,
Taipei Hsien 221, Taiwan, R.O.C.

Title	***BLANK***	
Size A4	Document Number **Kendo-3 UMA**	Rev **SE**
Date: Thursday, October 07, 2010	Sheet 102 of 107	

SODIMM should be installed on CH0 Primary at first.

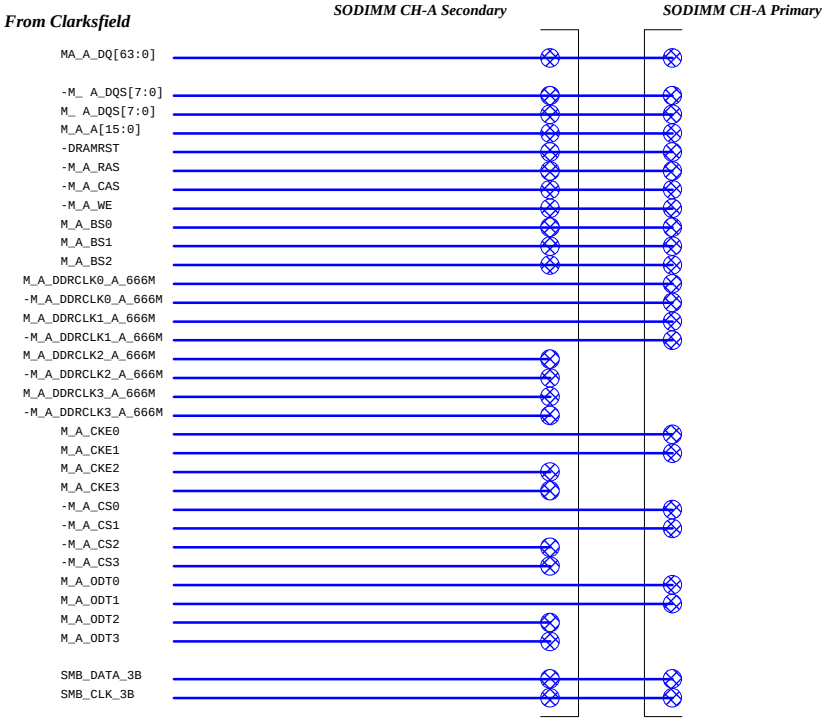

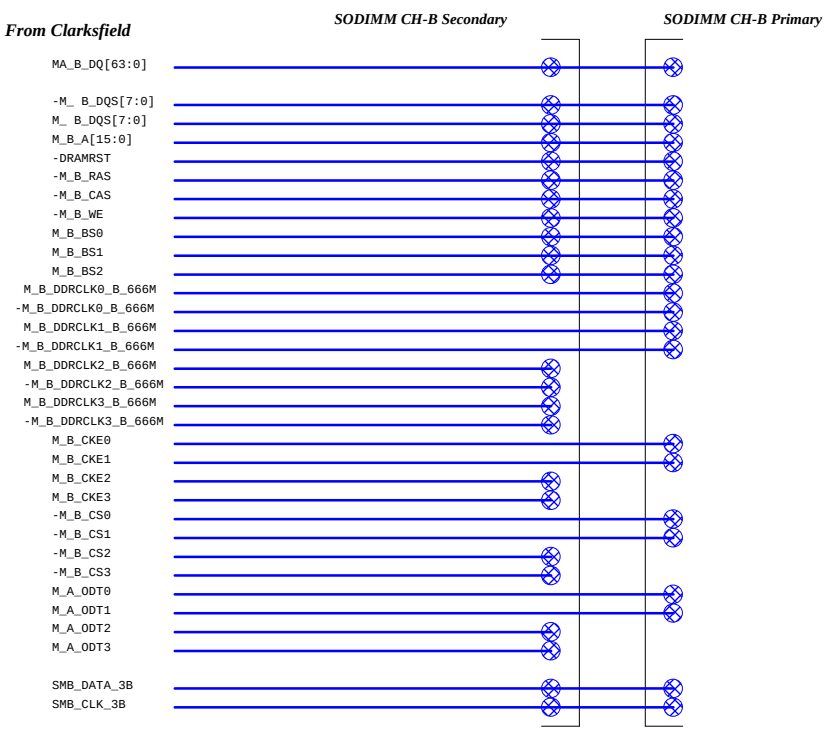

SODIMM IIC Address :
- ***CH-A Primary : 50h***
- ***CH-B Primary : 51h***
- ***CH-A Secondary : 52h***
- ***CH-B Secondary : 53h***

Pin1 on SODIM connector (VREF_DQ) only conects to DDR Voltage divider.
Clarksfield H17/J17 is left.

<Variant Name>

緯創資通 Wistron Corporation
21F, 88, Sec.1, Hsin Tai Wu Rd., Hsichih,
Taipei Hsien 221, Taiwan, R.O.C.

Title: **SODIMM CONFIGURATION**

Size	Document Number	Rev
A2	Kendo-3 UMA	SE

Date: Thursday, October 07, 2010 Sheet 103 of 107

BLANK

<Variant Name>

緯創資通	**Wistron Corporation** 21F, 88, Sec.1, Hsin Tai Wu Rd., Hsichih, Taipei Hsien 221, Taiwan, R.O.C.	
Title	***BLANK***	
Size A4	Document Number **Kendo-3 UMA**	Rev **SE**
Date: Thursday, October 07, 2010	Sheet 104 of 107	

BLANK

<Variant Name>

緯創資通 Wistron Corporation
21F, 88, Sec.1, Hsin Tai Wu Rd., Hsichih,
Taipei Hsien 221, Taiwan, R.O.C.

Title	***BLANK***	
Size A4	Document Number **Kendo-3 UMA**	Rev **SE**
Date: Thursday, October 07, 2010	Sheet 105 of 107	

Long power trace EMI decoupling caps

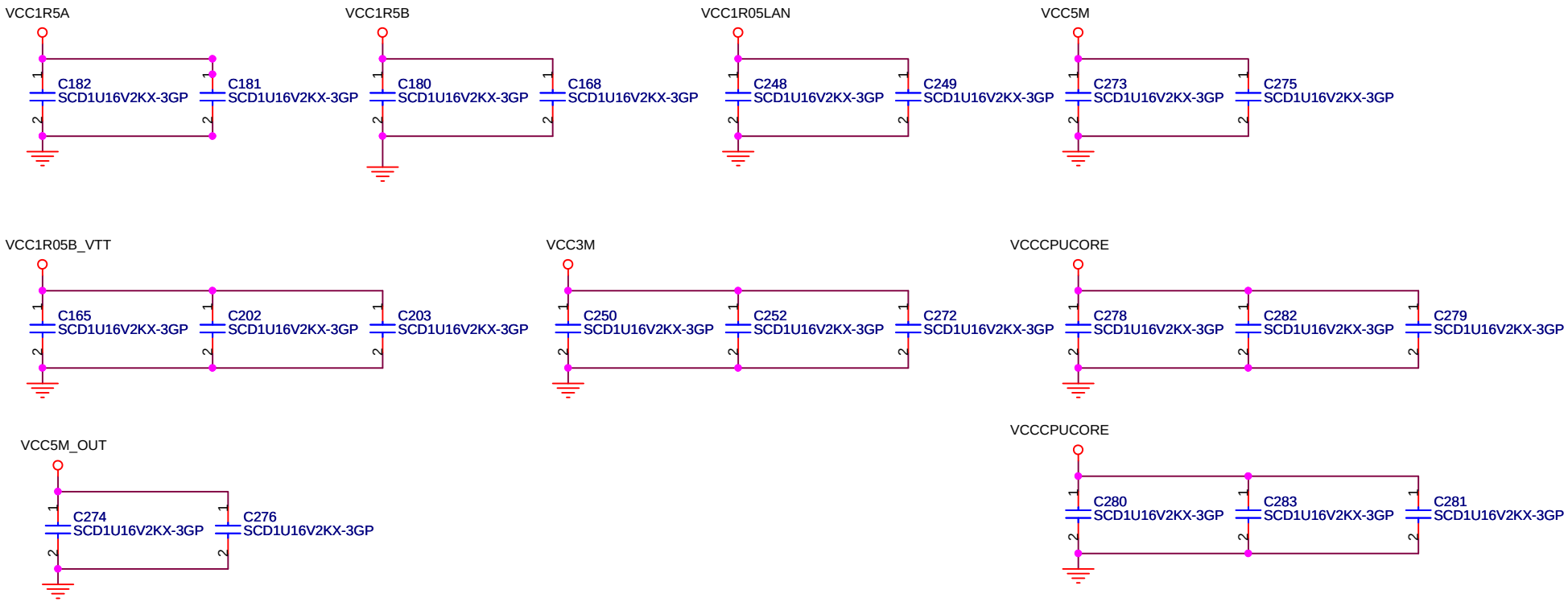

<Core Design>

緯創資通 **Wistron Corporation**
21F, 88, Sec.1, Hsin Tai Wu Rd., Hsichih,
Taipei Hsien 221, Taiwan, R.O.C.

Title: ***EMI DECOUPLING***

Size	Document Number	Rev
A4	**Kendo-3 UMA**	**SE**

Date: Thursday, October 07, 2010 Sheet 106 of 107

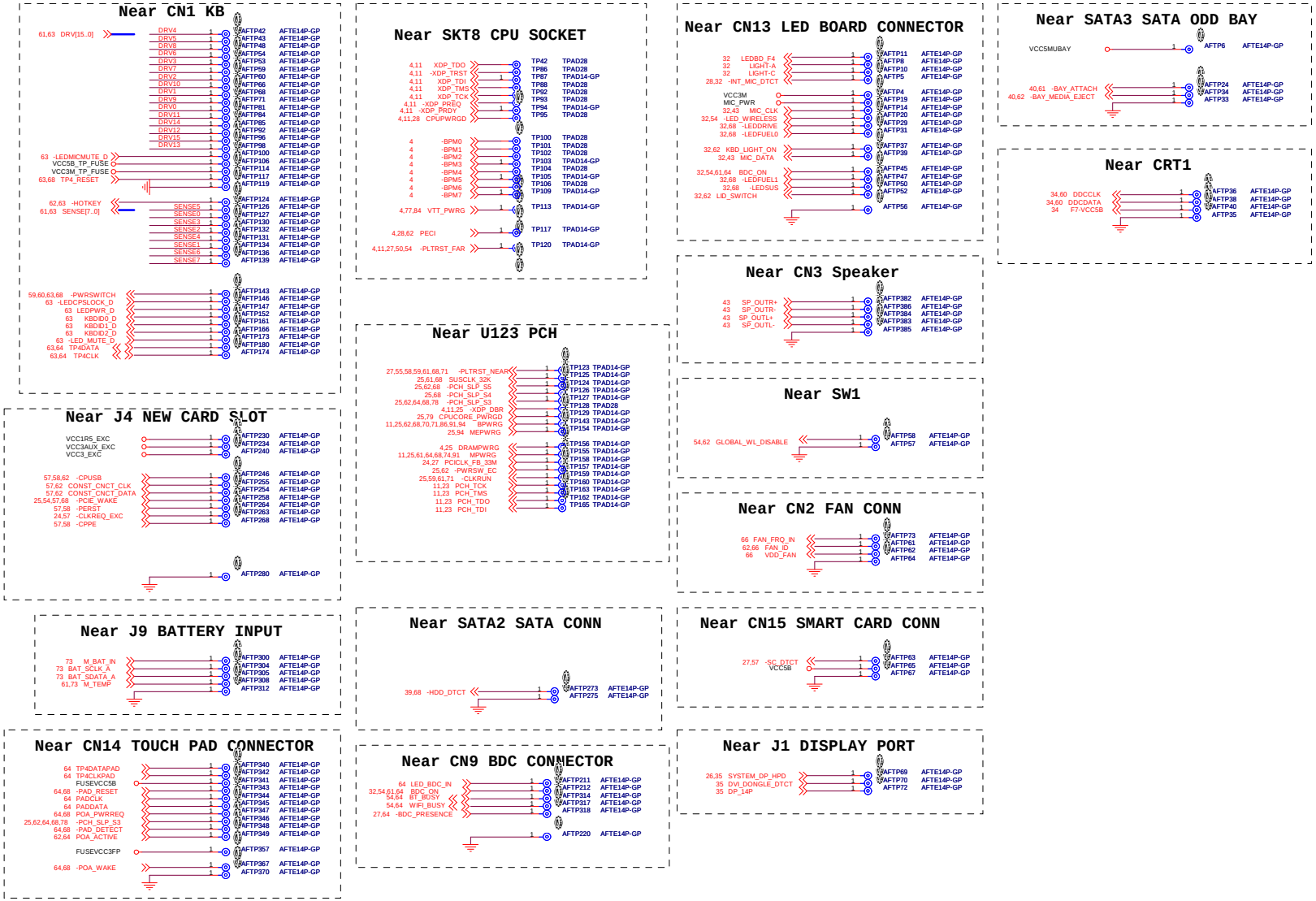

<Core Design>

緯創資通 **Wistron Corporation**
21F, 88, Sec.1, Hsin Tai Wu Rd., Hsichih,
Taipei Hsien 221, Taiwan, R.O.C.

Title: *TEST PAD*

Size	Document Number	Rev
A2	Kendo-3 UMA	SE

Date: Thursday, October 07, 2010 Sheet 107 of 107