MS-16GF ver:11

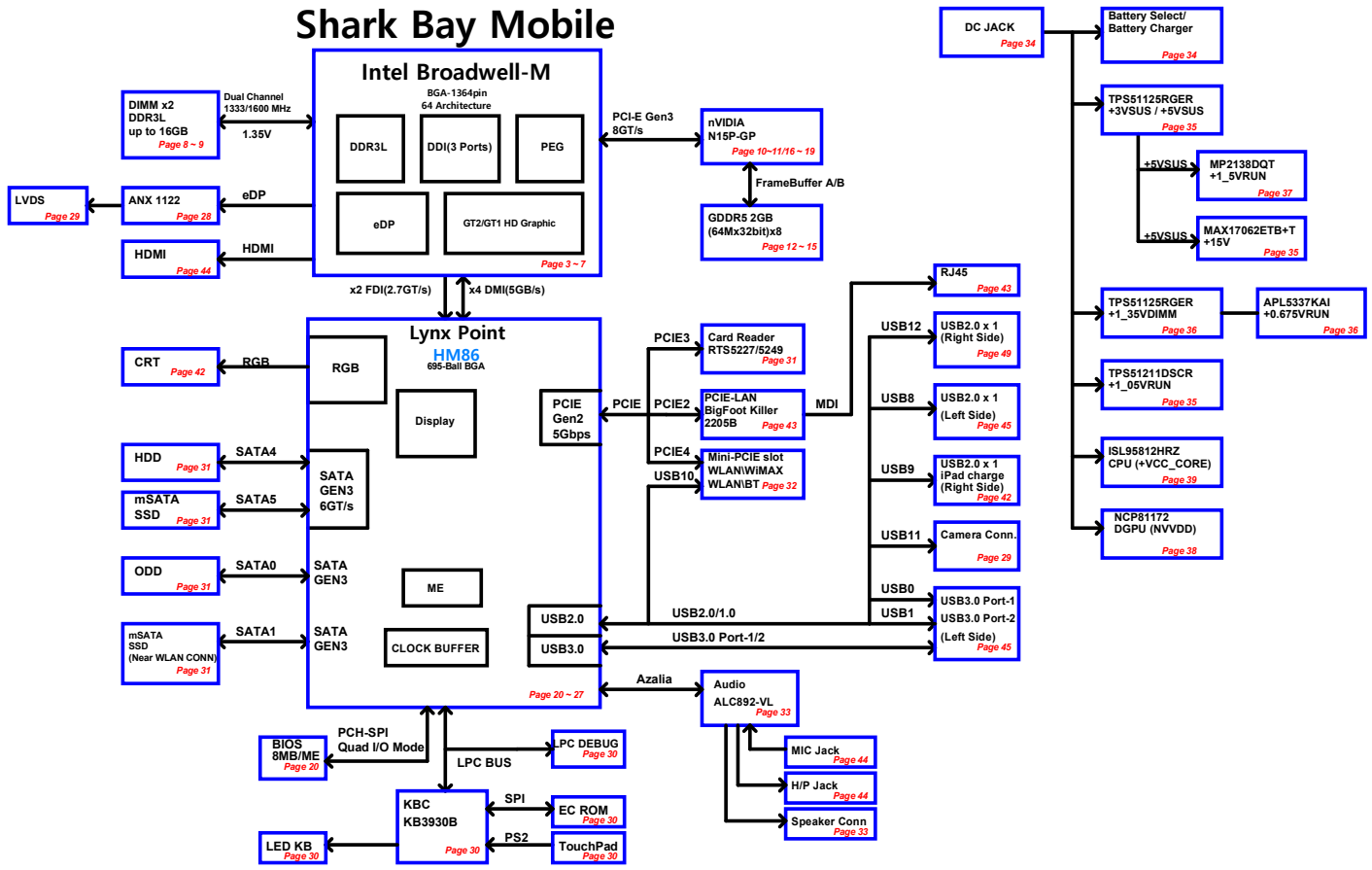

www.repair1.ru

SCHEMATIC ANNOTATIONS AND BOARD INFORMATION

Voltage Rails

Voltage	Description	Control Signal
PWR_SRC	AC ADAPTER OR BATTERY IN	
+5VALW	5.0V always on power rail	PWR_SRC
+3VALW	3.3V always on power rail	PWR_SRC
+5VSUS	5.0V power rail	SUS_ON
+3VSUS	3.3V power rail	SUS_ON
+1_35VDIMM	1.35V DDR3L power rail (off in S4-S5)	PM_SLP_S4#
+0_675VRUN	0.675V DDR3L Termination voltage (off in S3-S5)	PM_SLP_S3#
+5VRUN	5.0V switched power rail (off in S3-S5)	PM_SLP_S3#
+3VRUN	3.3V switched power rail (off in S3-S5 / M0)	PM_SLP_S3#
+1_5VRUN	1.5V switched power rail (off in S3-S5)	PM_SLP_S3#
+VCC_CORE	1.8V Core Voltage for Processor	VR_ON
+1_05VRUN	1.05V rail for Processor	PM_SLP_S3#
NVVDD	0.6~1.2V(VBoot:0.9V)Core Voltage for nVIDIA N14E-GE DGPU	GPIO11_GPUVID
+3V3_NV	3.3V GPU I/O power rail (off in Optimus OFF)	DGPU_PWR_EN#
FBVDDQ	1.35V FB / GDDR5 power rail (off in Optimus OFF)	GPU_PWRGD
PEX_VDD	1.05V PLL power rail (off in Optimus OFF)	GPU_PWRGD

Net Naming Conventions

```
Suffix
#  =  Active Low Signal
Prefix
H  =  Host
M  =  DDR Memory
TP =  Test Point (does not connect anywhere else)
```

PCB Footprints

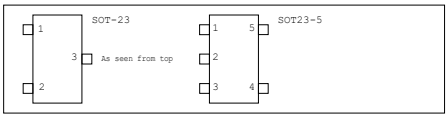

POWER STATES

STATE \ SIGNAL	SLP_S3#	SLP_S4#	SLP_S5#	+V*ALW	+*VSUS	+*VRUN	Clocks
S0(Full ON	HIGH	HIGH	HIGH	ON	ON	ON	ON
S3(Suspend to RAM	LOW	HIGH	HIGH	ON	ON	OFF	OFF
S4(Suspend to Disk	LOW	LOW	HIGH	ON	OFF	OFF	OFF
S5 (Soft OFF	LOW	LOW	LOW	ON	OFF	OFF	OFF

Note : WHEN AC MODE , System turn on then +V*SUS will always keep high

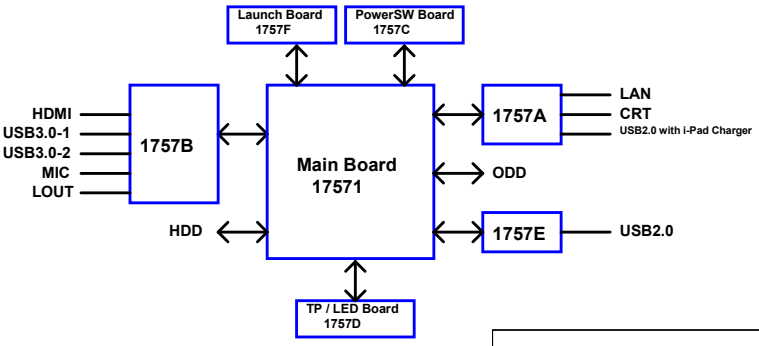

Title	Platform		
Size: Custom	Document Number: MS_16GF		Rev: 11
Date: Friday, January 03, 2014	Sheet 2 of 53		

www.repair1.ru

Haswell (DMI,PEG,FDI)

Haswell (CLK,MISC,JTAG)

A13-2420115-I06

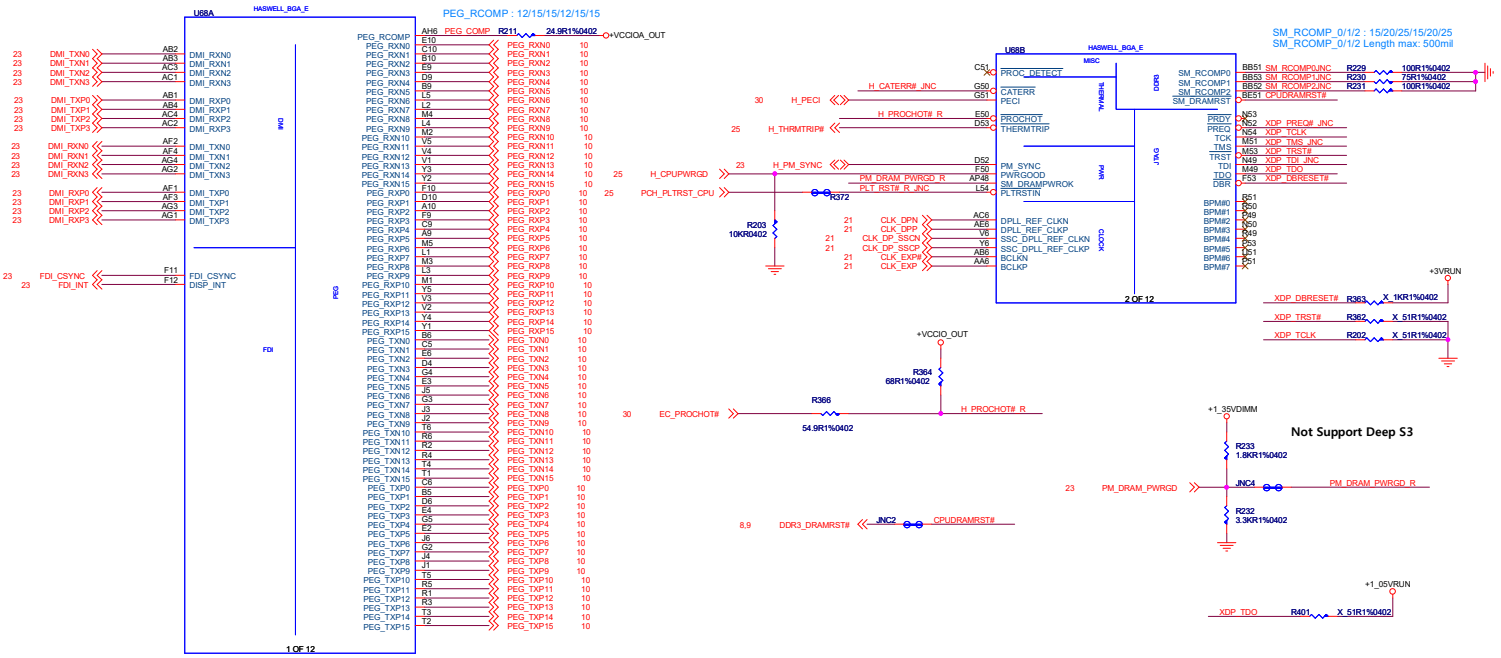

Title: CPU-1 (Host Bus)

Size: Custom | Document Number: MS_16GF | Rev: 11

Date: Friday, January 03, 2014 | Sheet 3 of 53

www.repair1.ru

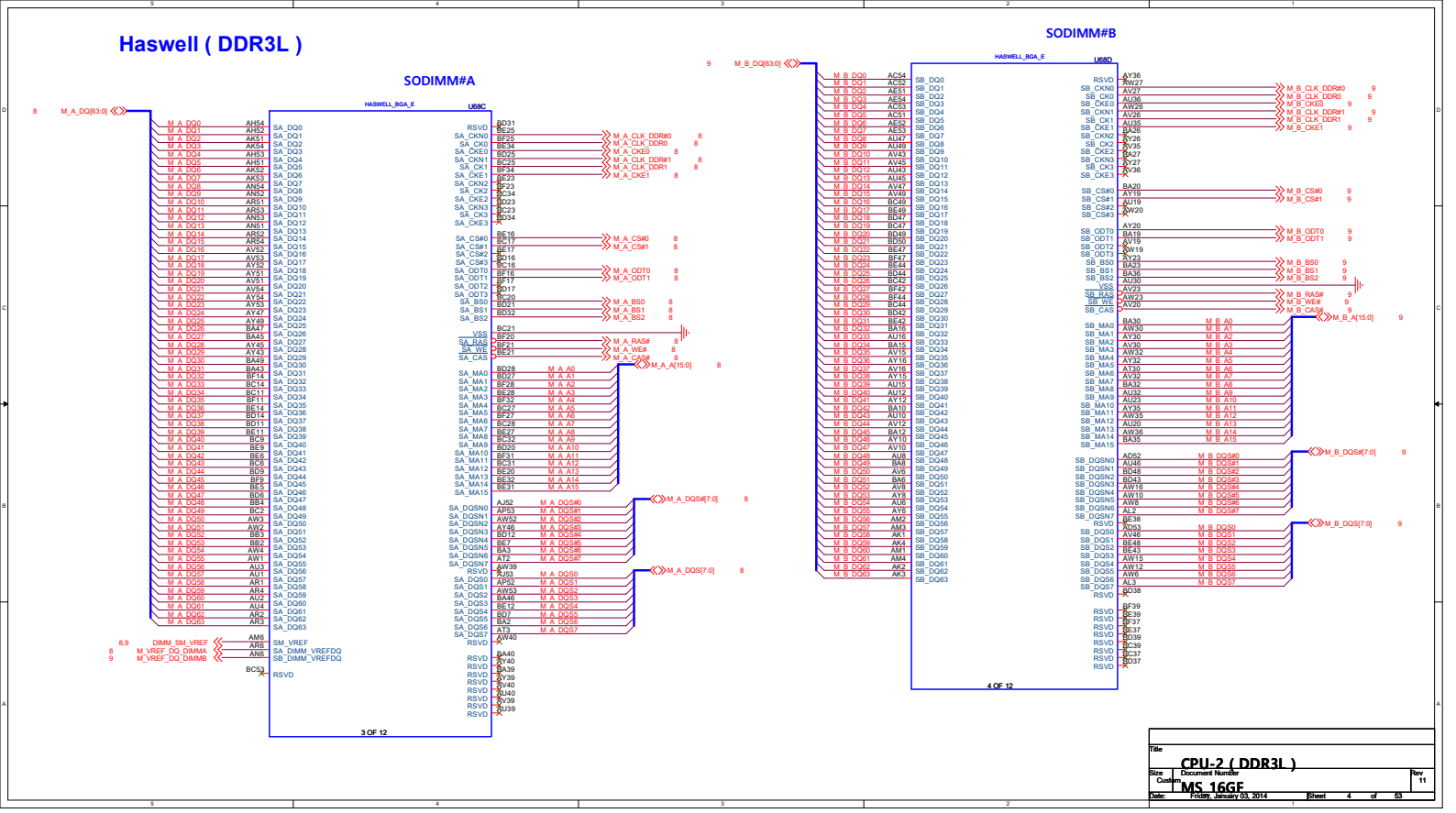

www.repair1.ru

Haswell (Display)

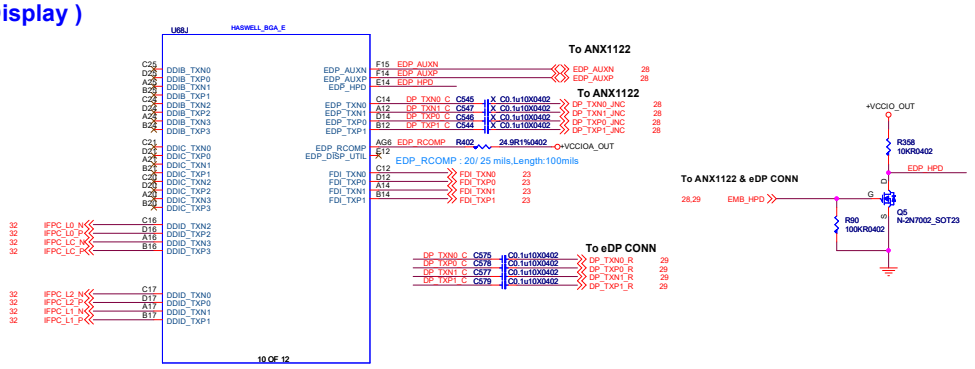

Haswell (Reserved)

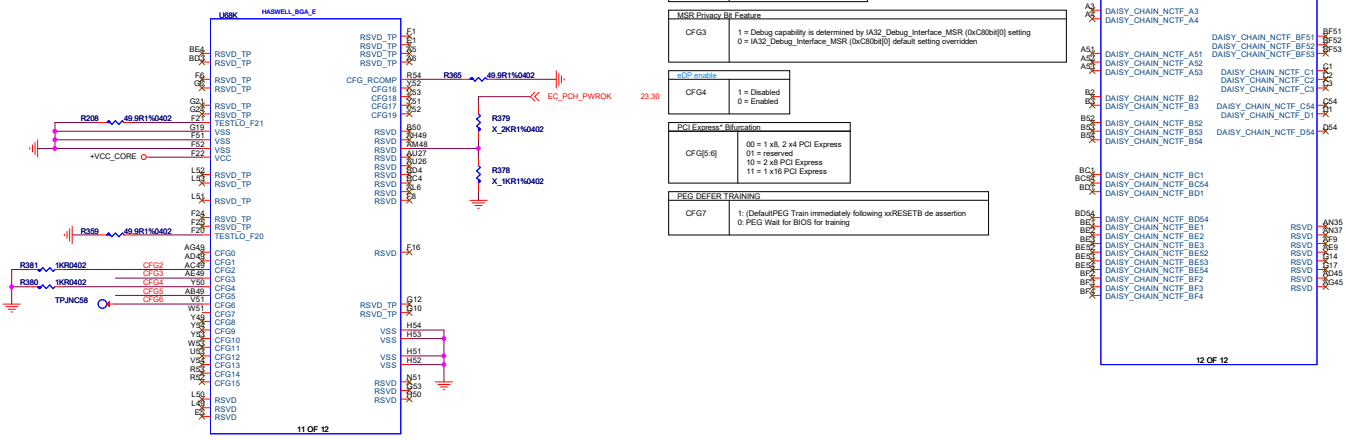

PCI Express* Static x16 Lane Numbering Reversal

CFG2	1 = Normal operation 0 = Lane numbers reversed.

MSR Privacy Bit Feature

CFG3	1 = Debug capability is determined by IA32_Debug_Interface_MSR (0xC80bit[0] setting 0 = IA32_Debug_Interface_MSR (0xC80bit[0] default setting overridden

eDP enable

CFG4	1 = Disabled 0 = Enabled

PCI Express* Bifurcation

CFG[5:6]	00 = 1 x8, 2 x4 PCI Express 01 = reserved 10 = 2 x8 PCI Express 11 = 1 x16 PCI Express

PEG DEFER TRAINING

CFG7	1: (DefaultPEG Train immediately following xxRESETB de assertion 0: PEG Wait for BIOS for training

Title	CPU-3 (Display/Reserved)	
Size: Custom	Document Number: MS_16GE	Rev: 11
Date: Friday, January 03, 2014	Sheet 5 of 53	

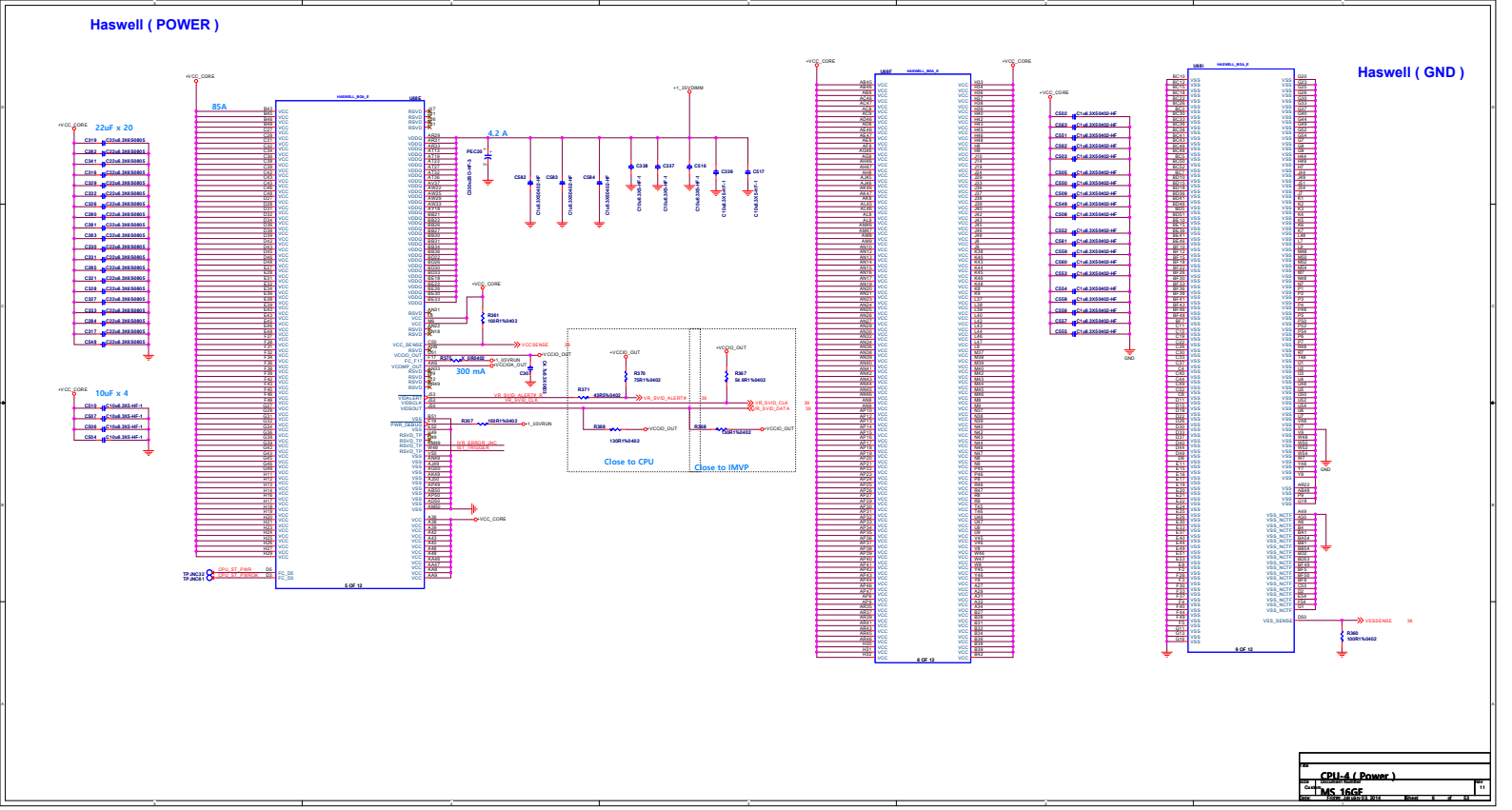
Haswell (POWER)
Haswell (GND)
22uF x 20
10uF x 4
85A
4.2 A
300 mA
Close to CPU
Close to IMVP
+VCC_CORE
+1_5SVRUN
+VCCIO_OUT
+VCCSENSE
VCCSENSE
VSSSENSE
GND
5 OF 12
6 OF 12
9 OF 12
CPU-4 (Power)
MS_16GF
11

Haswell (GND)

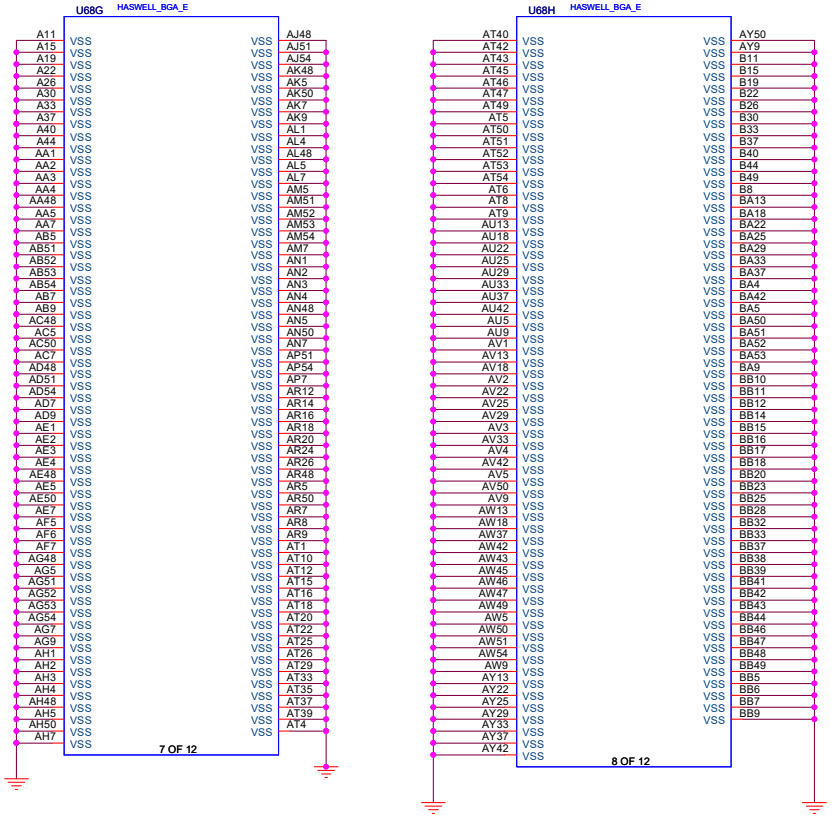

Title	CPU-5 (GND)		
Size Custom	Document Number MS 16GF		Rev 11
Date: Friday, January 03, 2014	Sheet 7 of 53		

SODIMM#A

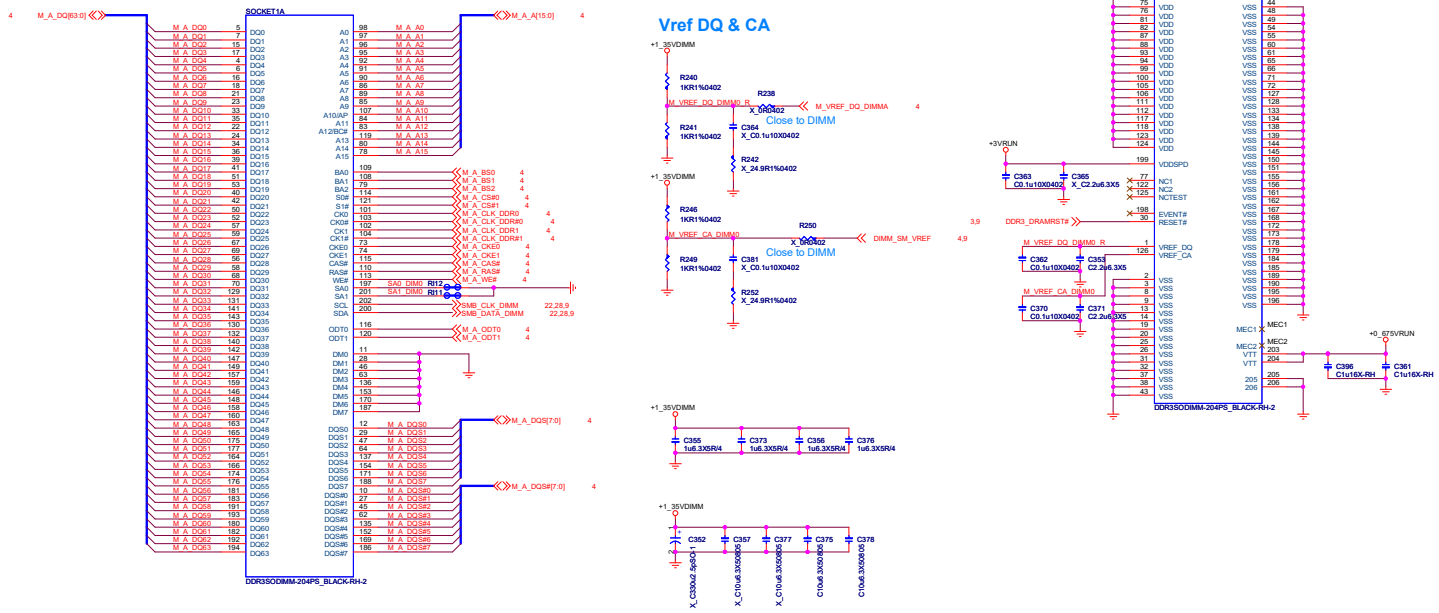

Title	DDR3L SODIMM 0
Size	Custom
Document Number	MS_16GF
Rev	11
Date:	Friday, January 03, 2014
Sheet	8 of 53

SODIMM#B

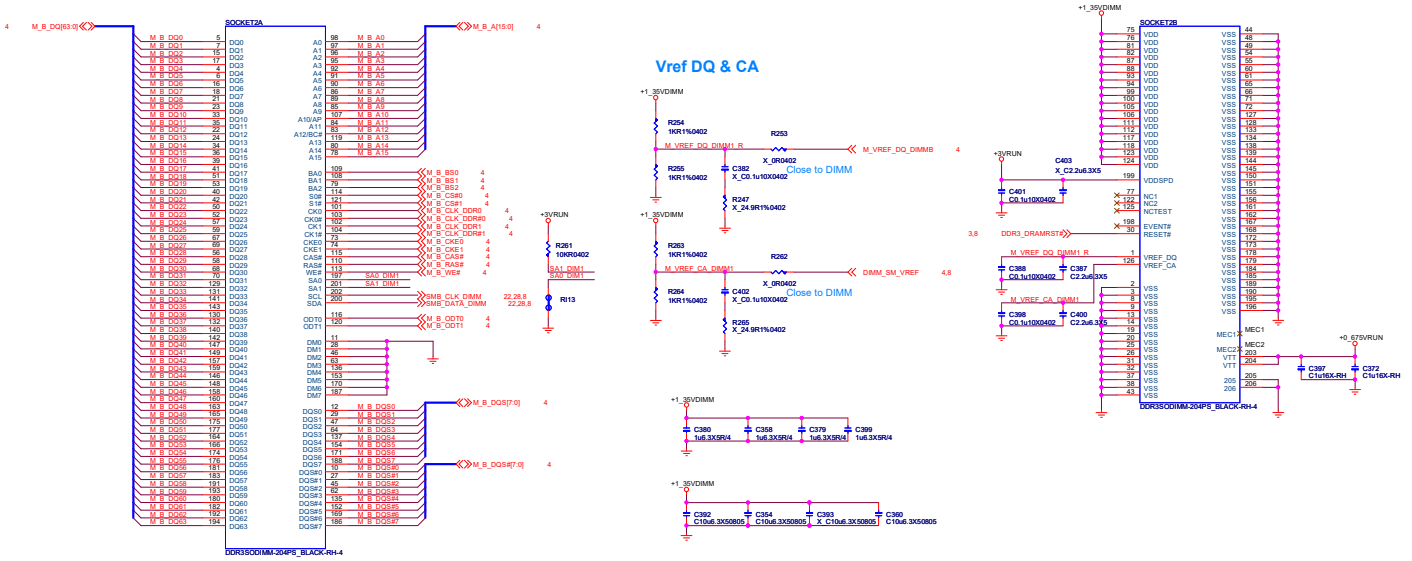

Title	DDR3L SODIMM 1		
Size Custom	Document Number MS_16GF		Rev 11
Date: Friday, January 03, 2014		Sheet 9 of 53	

N14E-GE(PCI-Express Gen3 x16 Interface)

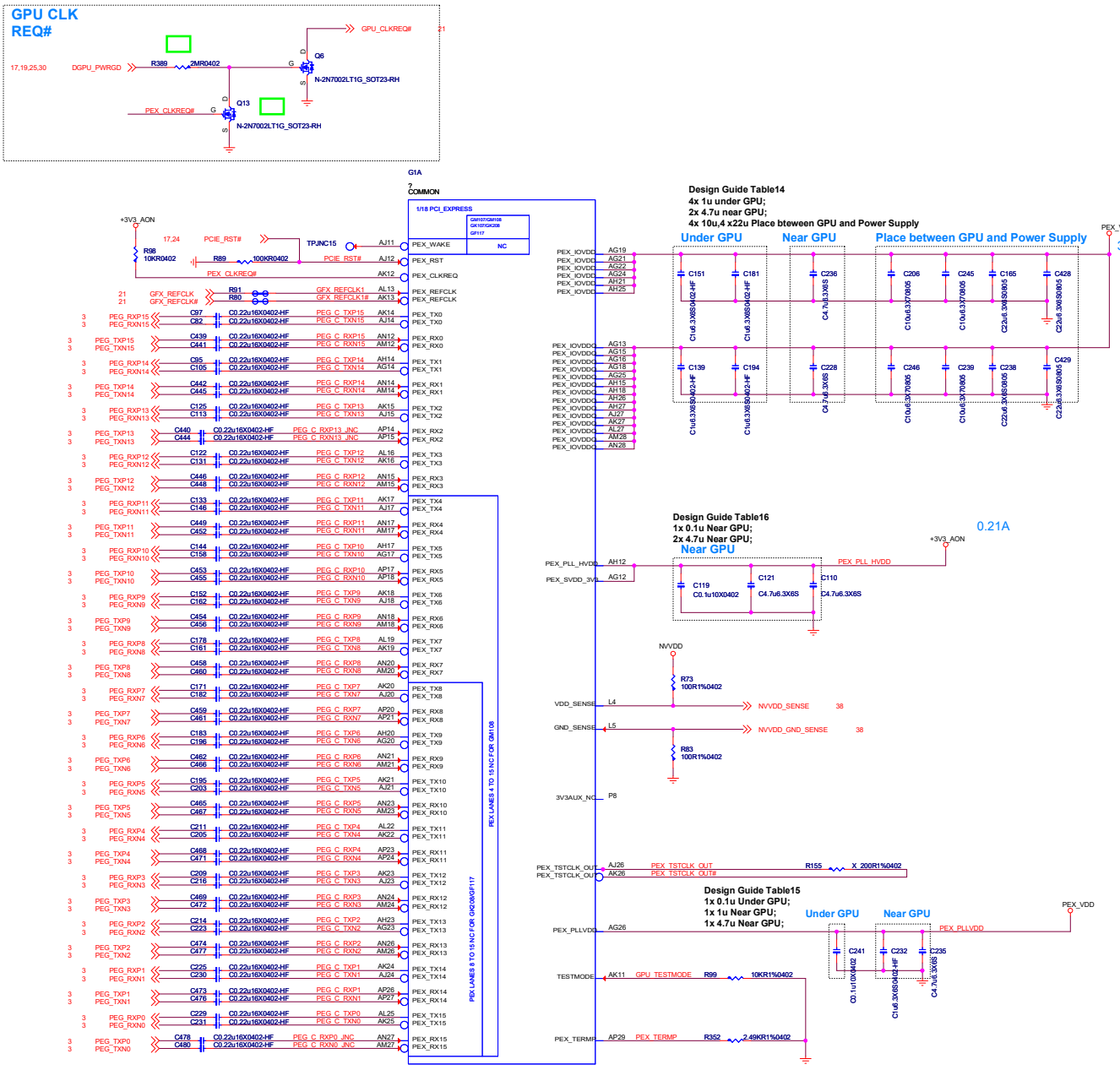

Title	N14E-GE PCI-E Host
Size	Custom
Document Number	MS_16GF
Rev	11
Date:	Friday, January 03, 2014
Sheet	10 of 53

N14E-GE(Frame Buffer Interface)

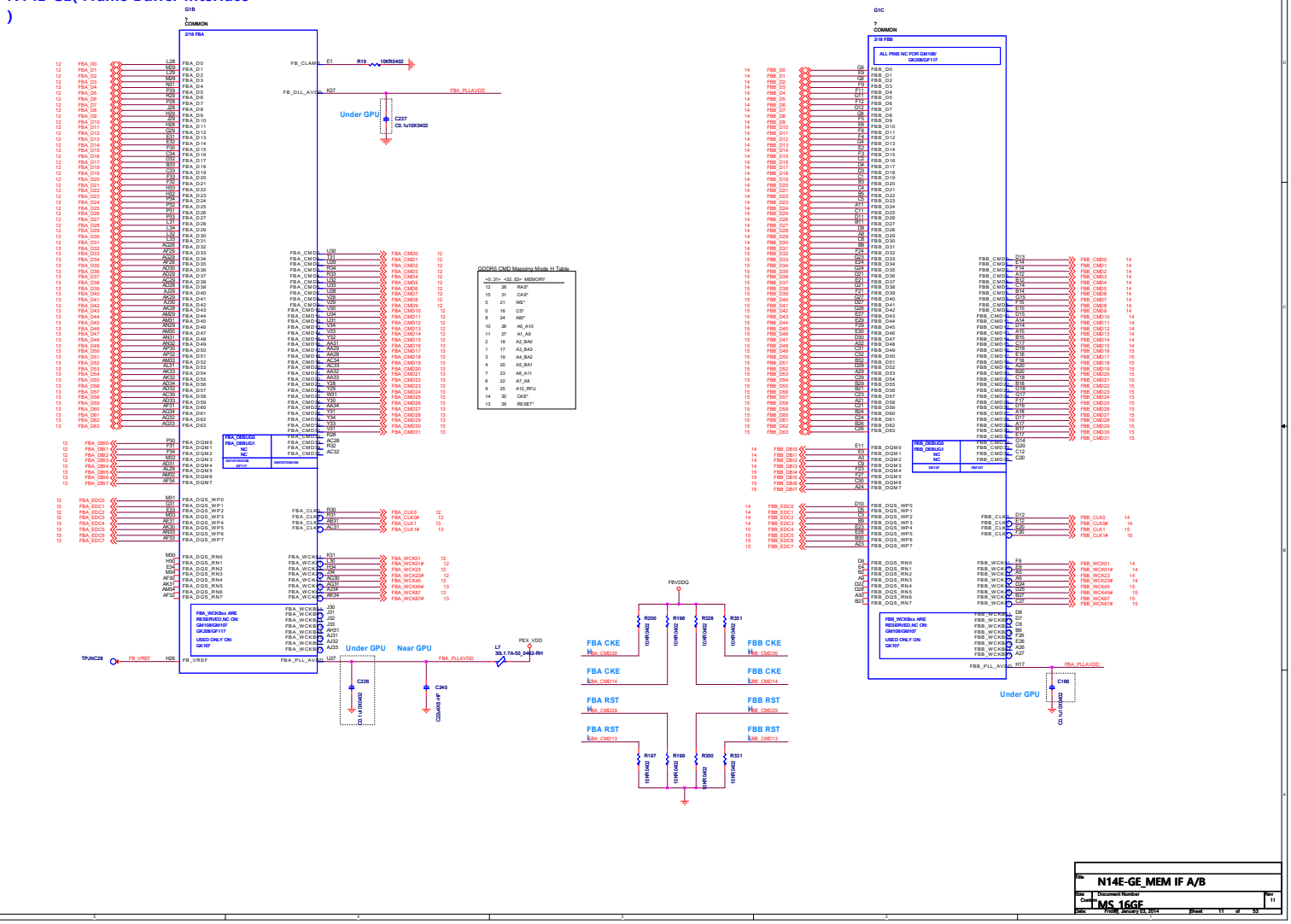

Title	N14E-GE_MEM IF A/B		
Size	Document Number		Rev
Custom	MS_16GF		11
Date:	Friday, January 03, 2014	Sheet 11 of 53	

N14E-GE(GDDR5 Frame A-1)

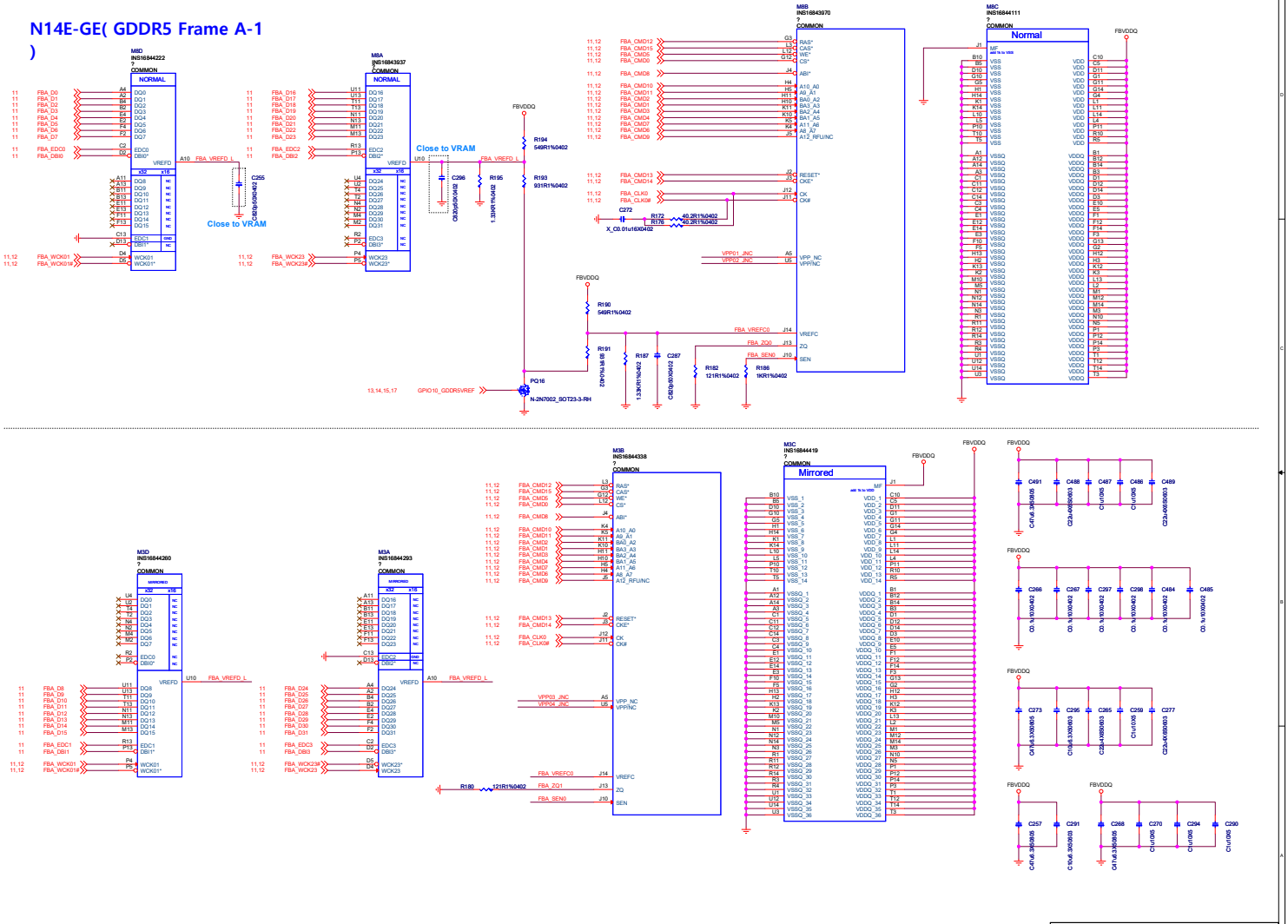

Title	N14E-GE_GDDR5 Frame A-1
Size	Document Number
Custom	MS_16GE
Rev	11
Date:	Friday, January 03, 2014
Sheet	12 of 53

N14E-GE(GDDR5 Frame A-2)

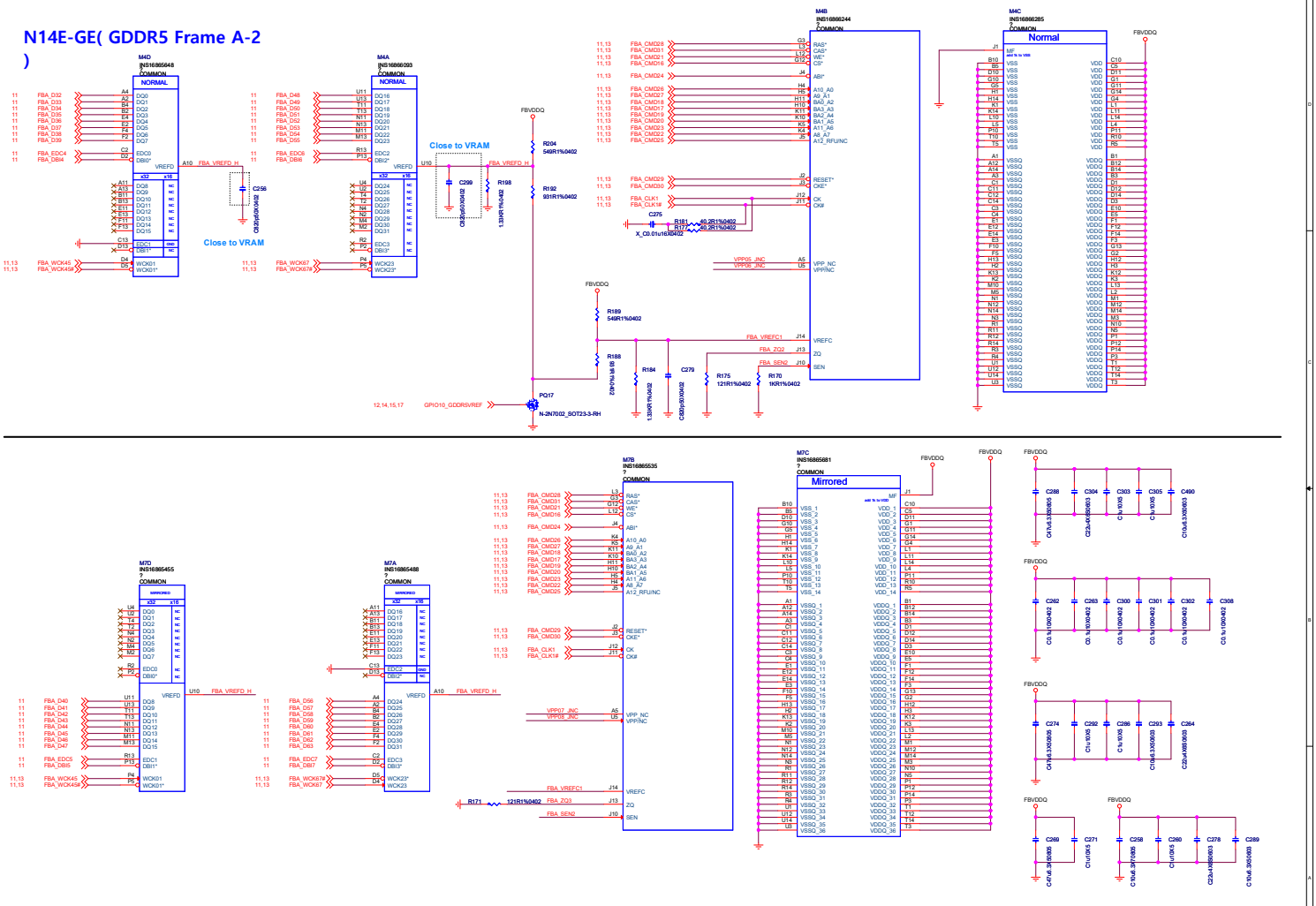

Title	N14E-GE_GDDR5 Frame A-2
Size	Document Number
Custom	MS_16GE
Rev	11
Date:	Friday, January 03, 2014
Sheet	13 of 53

N14E-GE(GDDR5 Frame B-1)

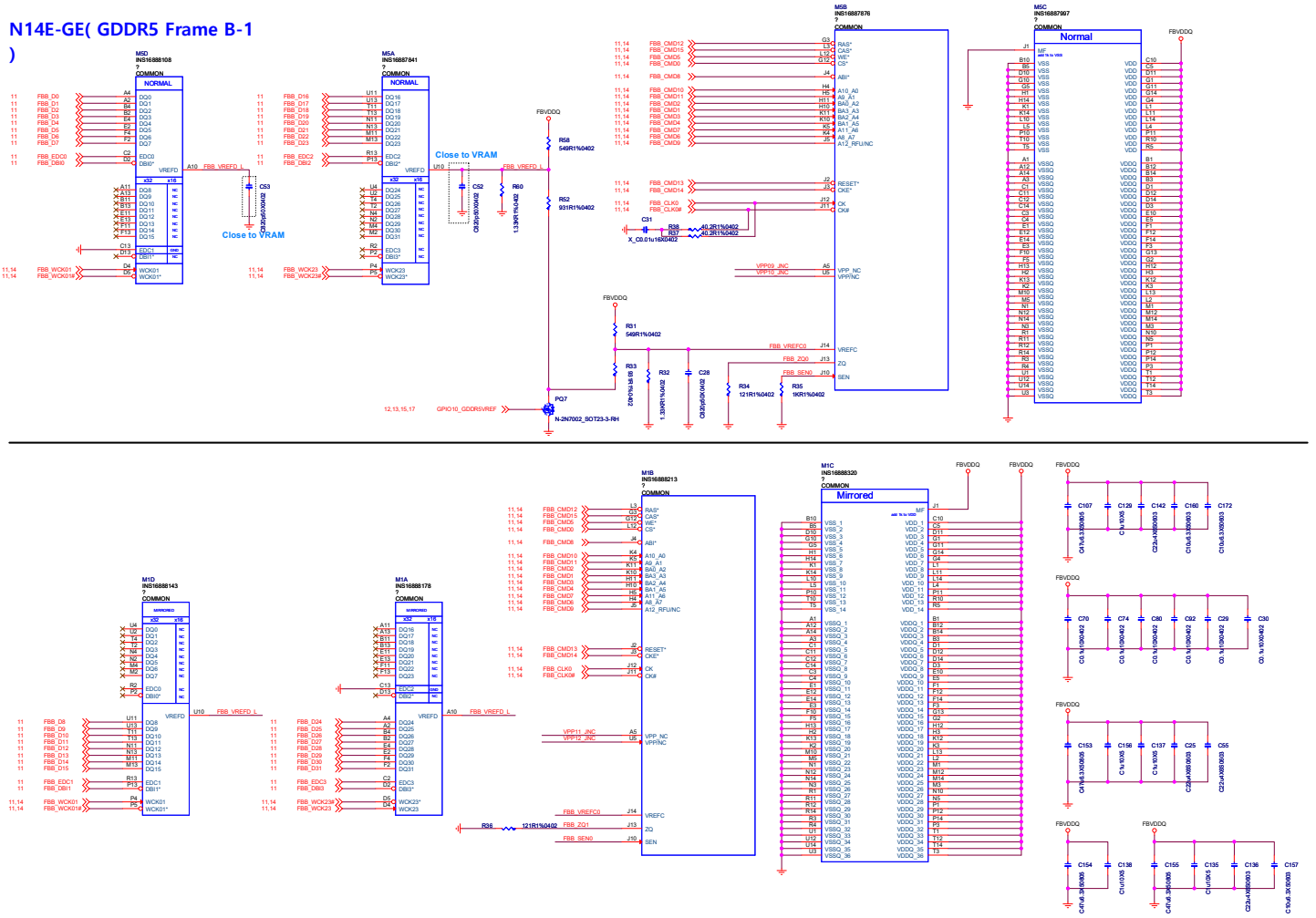

Title	N14E-GE_GDDR5 Frame B-1	
Size	Document Number	Rev 11
Custom	MS_16GE	
Date: Friday, January 03, 2014	Sheet 14 of 53	

N14E-GE(GDDR5 Frame B-2)

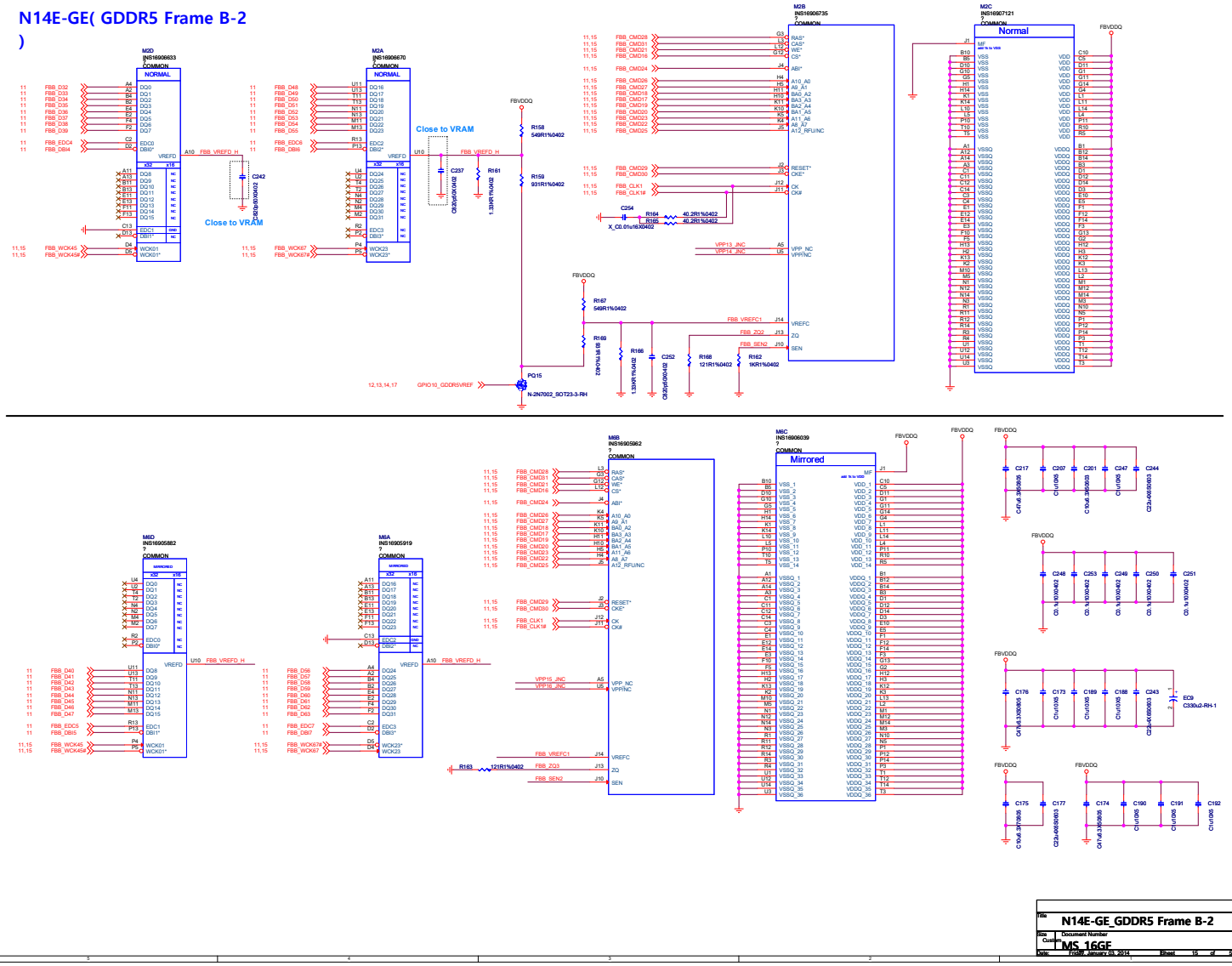

Title	N14E-GE_GDDR5 Frame B-2
Size	Document Number
Custom	MS_16GE
Rev	11
Date:	Friday, January 03, 2014
Sheet	15 of 53

N14E-GE(Display IF)

IFP A/B LVDSDual Link

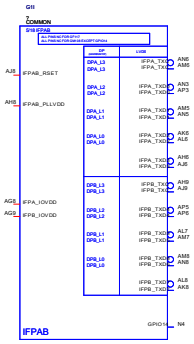

IFP C Native HDMI OR DP

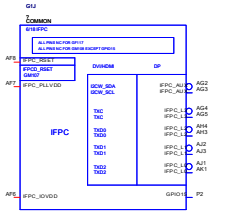

IFP E/F Dual Link TMDS DVI-I

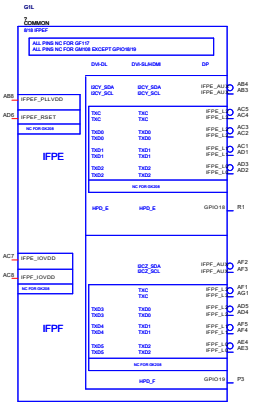

DAC A VGA

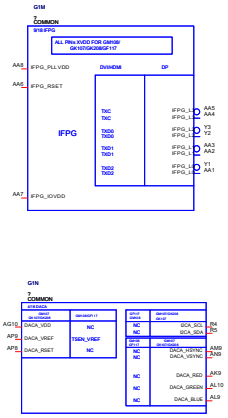

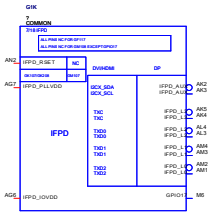

Title	N14E-GE_Display IF
Size / Custom	Document Number: MS_16GF
Rev	11
Date: Friday, January 03, 2014	Sheet 16 of 53

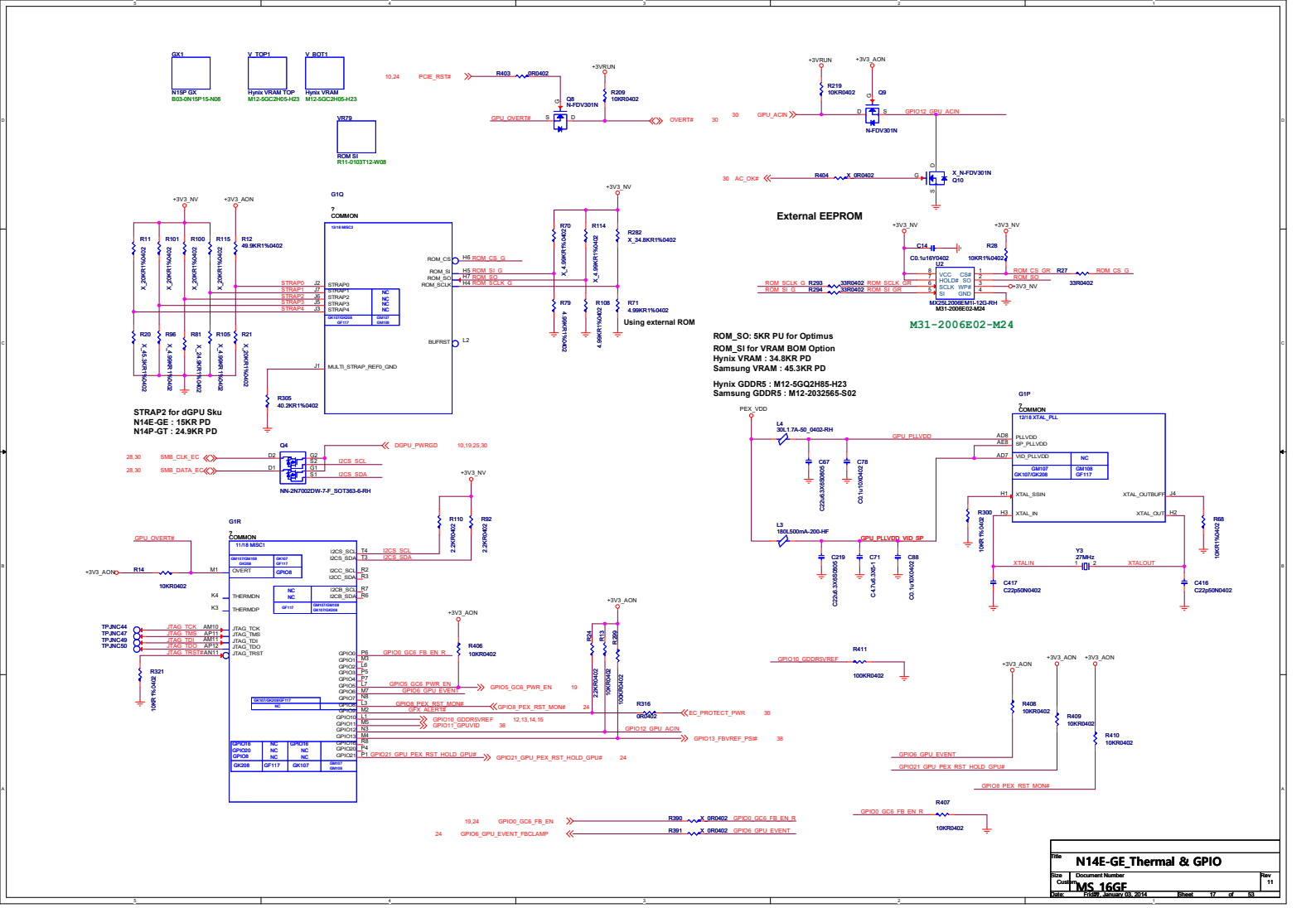

Title	N14E-GE_Thermal & GPIO		
Size Custom	Document Number MS_16GF		Rev 11
Date: Friday, January 03, 2014	Sheet 17 of 53		

N14E-GE(Power & GND)

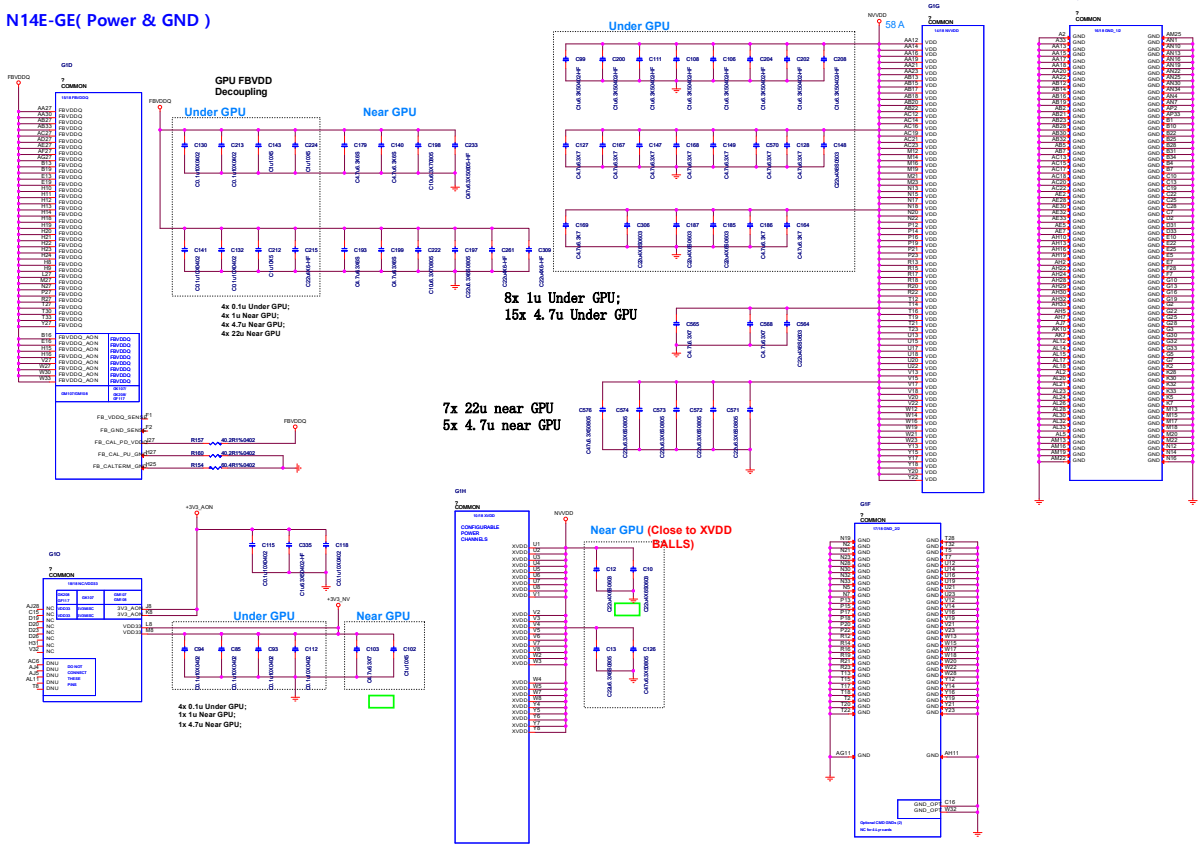

Size	N14E-GE Power & GND
Document Number	MS 16GF
Rev	11
Date: Friday, January 03, 2014	Sheet 18 of 53

N15P-GE(Power Control)

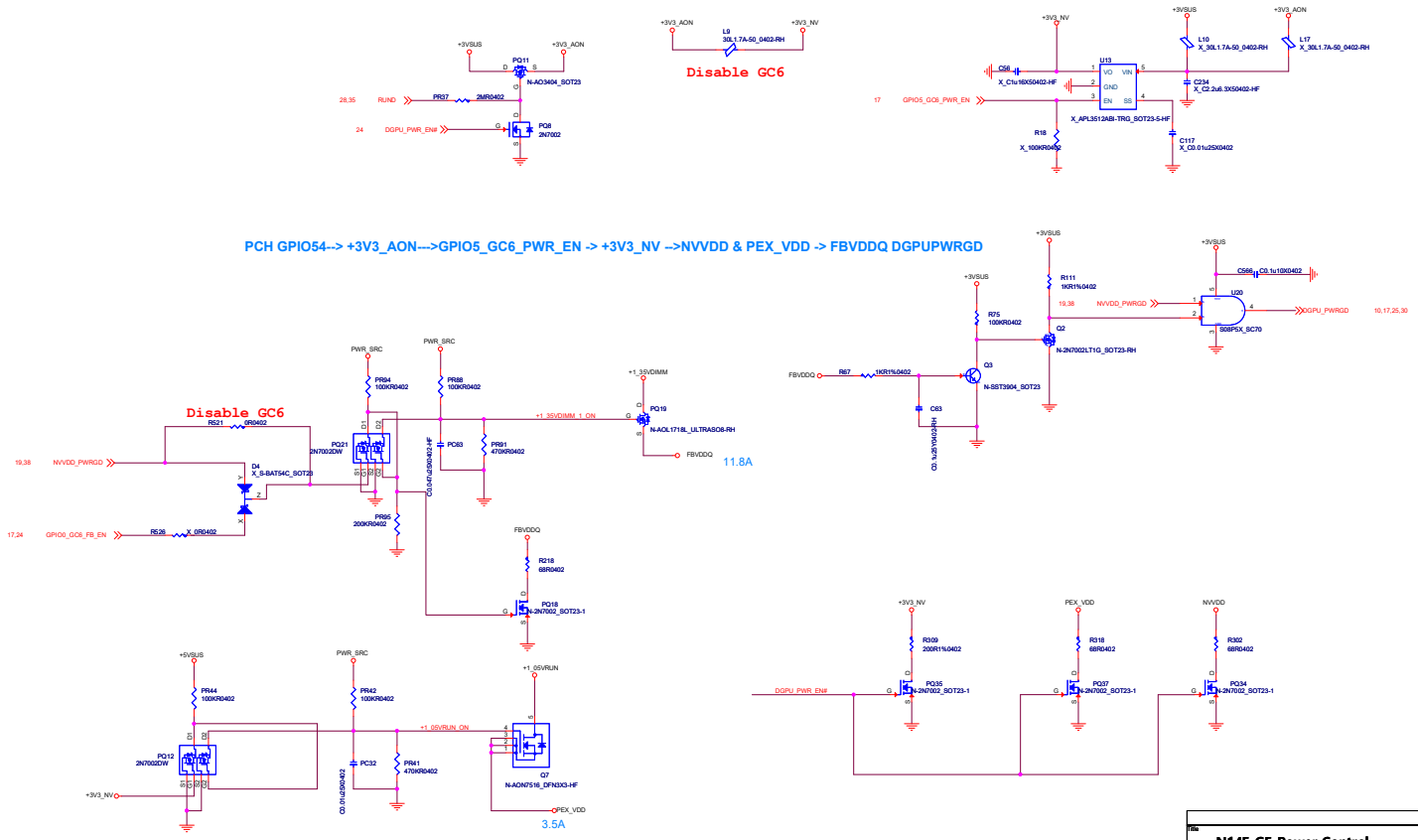

Title	N14E-GE Power Control		
Size: Custom	Document Number: MS_16GE		Rev: 11
Date: Friday, January 03, 2014	Sheet 19 of 53		

Lynx Point (HDA,JTAG,SATA)

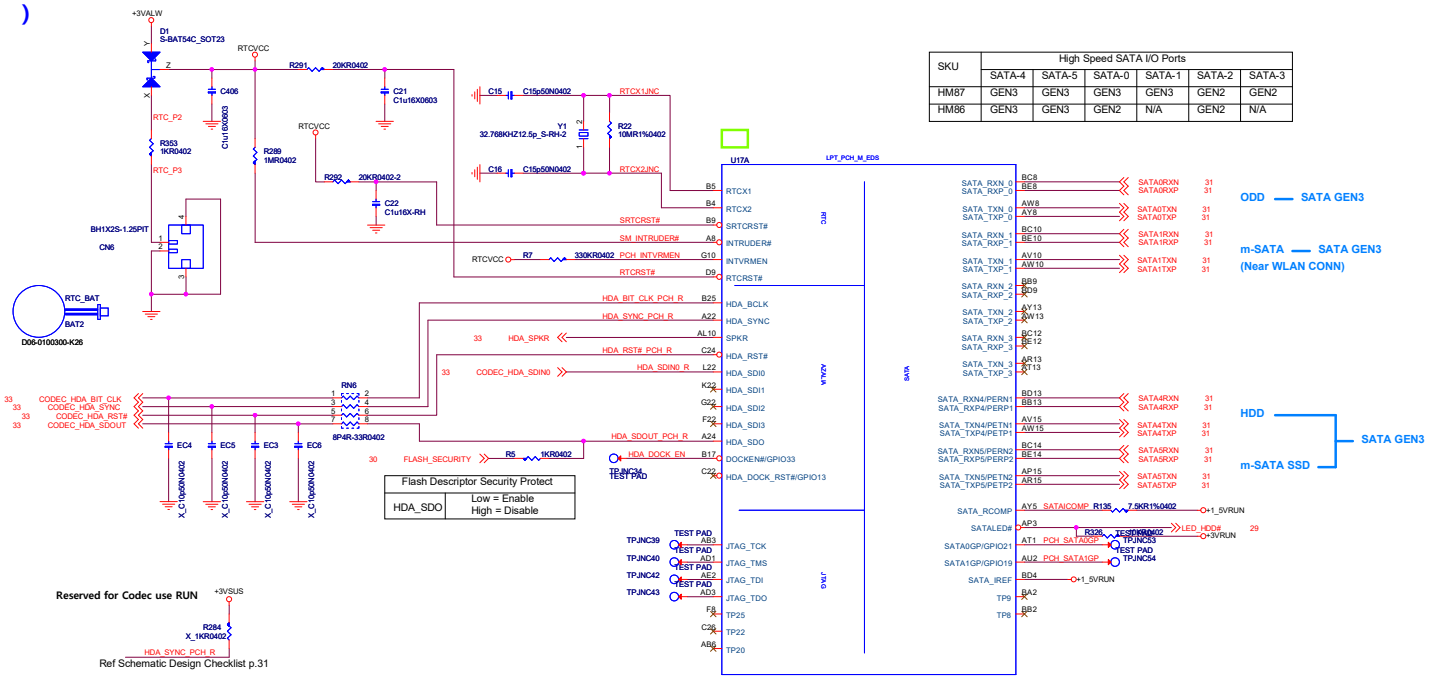

SKU	High Speed SATA I/O Ports					
	SATA-4	SATA-5	SATA-0	SATA-1	SATA-2	SATA-3
HM87	GEN3	GEN3	GEN3	GEN3	GEN2	GEN2
HM86	GEN3	GEN3	GEN2	N/A	GEN2	N/A

Title	PCH-1 (HDA/JTAG/SATA)		
Size: Custom	Document Number: MS_16GF		Rev: 11
Date: Friday, January 03, 2014	Sheet 20 of 53		

Lynx Point (Clock)

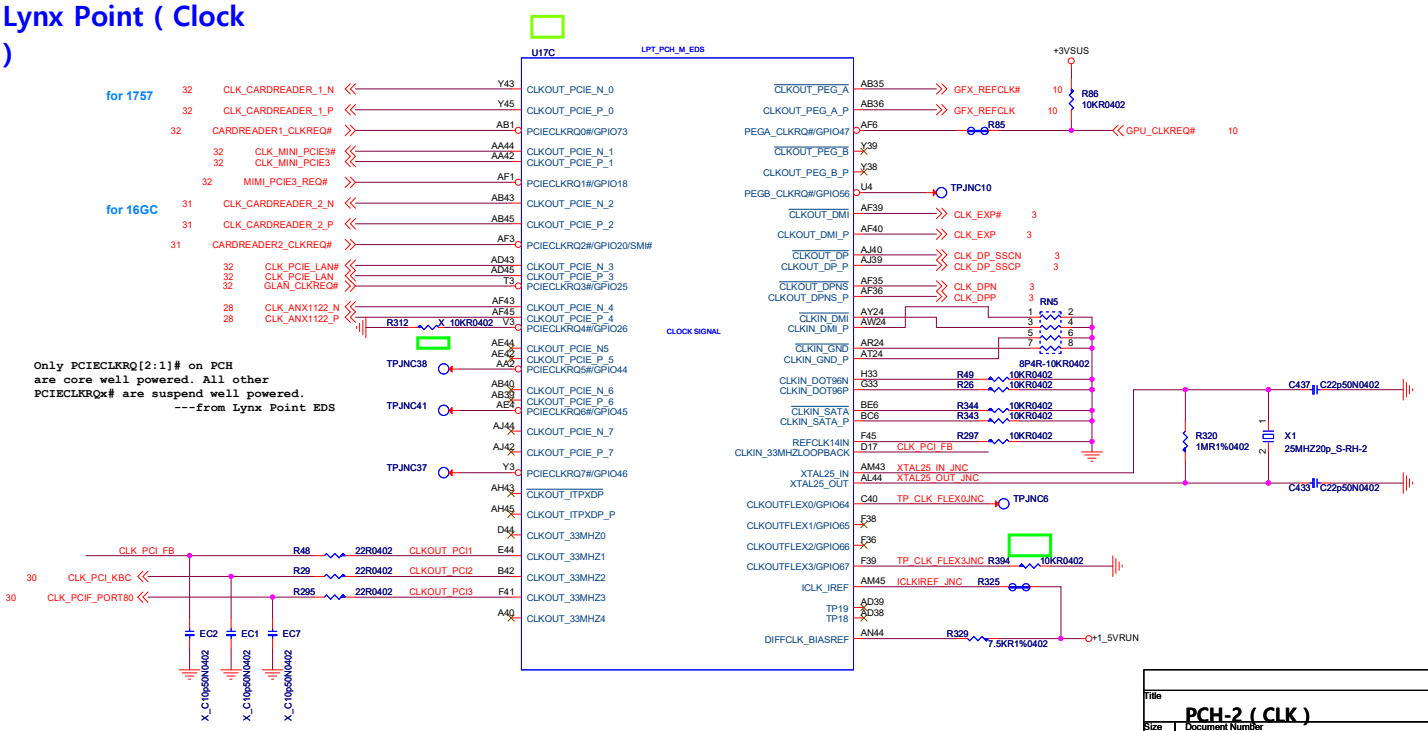

Only PCIECLKRQ[2:1]# on PCH
are core well powered. All other
PCIECLKRQx# are suspend well powered.
---from Lynx Point EDS

Title	PCH-2 (CLK)		
Size Custom	Document Number MS_16GF		Rev 11
Date: Friday, January 03, 2014		Sheet 21 of 53	

Lynx Point (LPC,SMBUS)

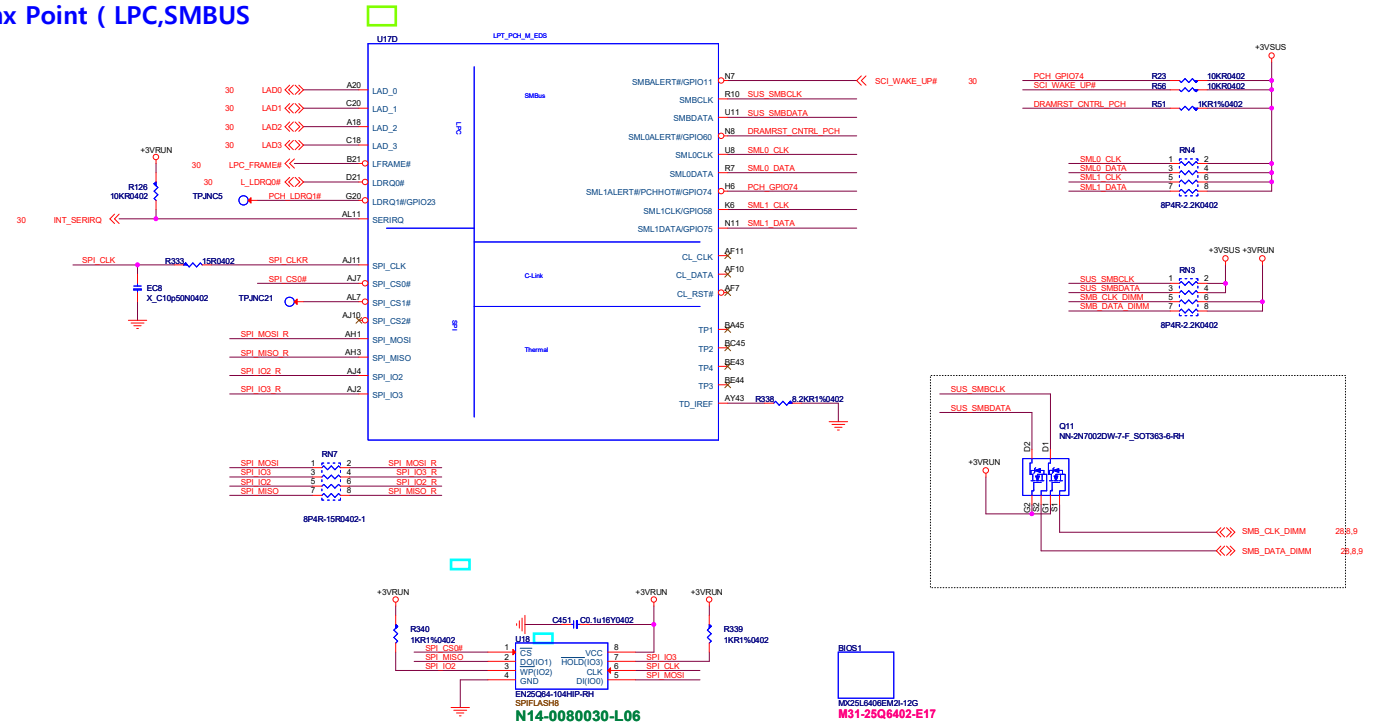

Title	PCH-3 (LPC,SMBUS)		
Size	Document Number		Rev
Custom	MS_16GF		11
Date: Friday, January 03, 2014		Sheet 22 of 53	

Lynx Point (DMI,FDI)

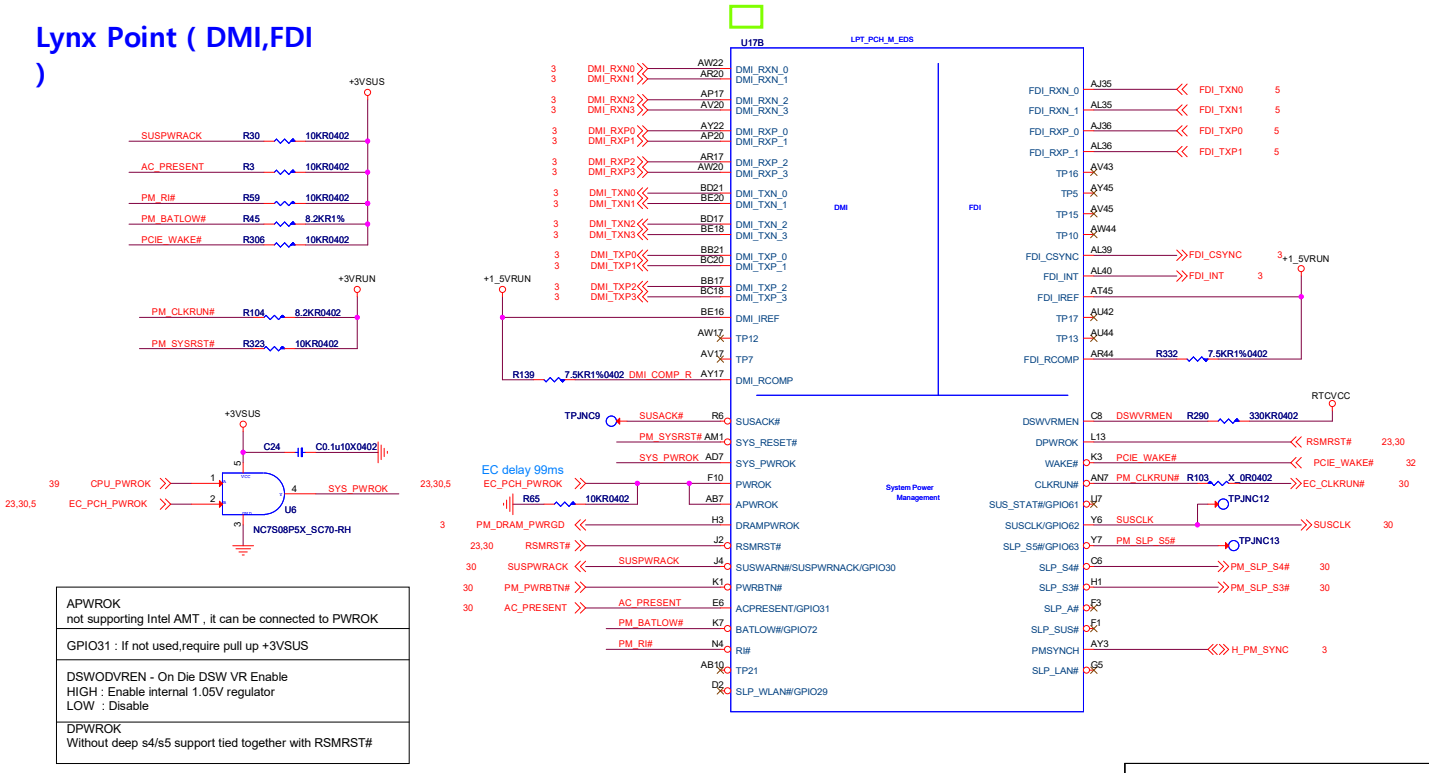

APWROK not supporting Intel AMT , it can be connected to PWROK
GPIO31 : If not used,require pull up +3VSUS
DSWODVREN - On Die DSW VR Enable HIGH : Enable internal 1.05V regulator LOW : Disable
DPWROK Without deep s4/s5 support tied together with RSMRST#

Title	PCH-4 (DMI,FDI)	
Size Custom	Document Number MS_16GF	Rev 11
Date: Friday, January 03, 2014	Sheet 23 of 53	

Lynx Point (PCI,DDI)

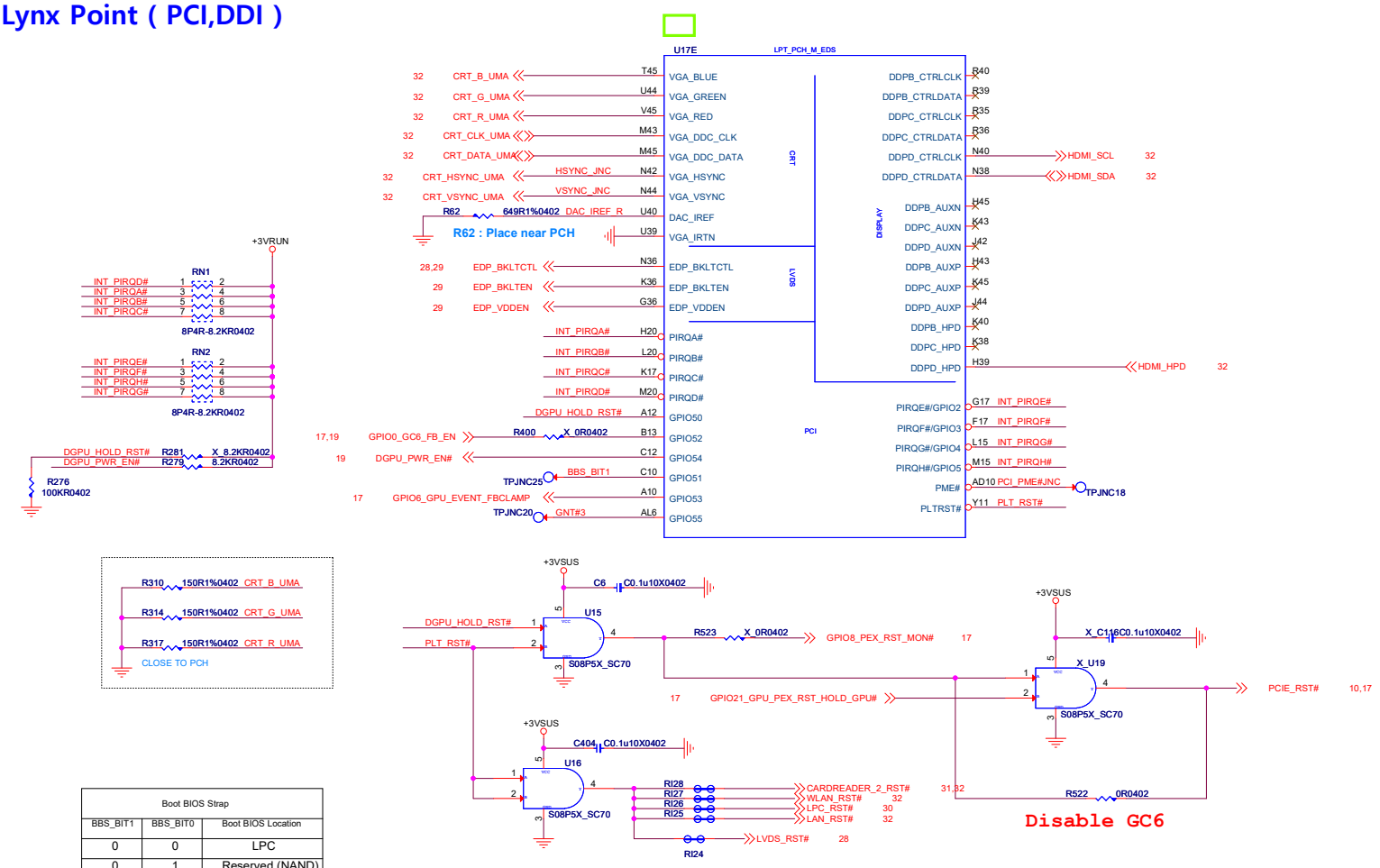

Boot BIOS Strap		
BBS_BIT1	BBS_BIT0	Boot BIOS Location
0	0	LPC
0	1	Reserved (NAND)
1	0	N/A
1	1	SPI

Title	PCH-5 (PCI,DDI)	
Size: Custom	Document Number: MS_16GF	Rev: 11
Date: Friday, January 03, 2014	Sheet 24 of 53	

Lynx Point (GPIO,MISC)

GPIO Setting : Ref 486708_LPT_EDS Section2.24

PLL ON DIE VR_ENABLE	
GPIO28	Internal pull high (Enable)
	Low: Disable

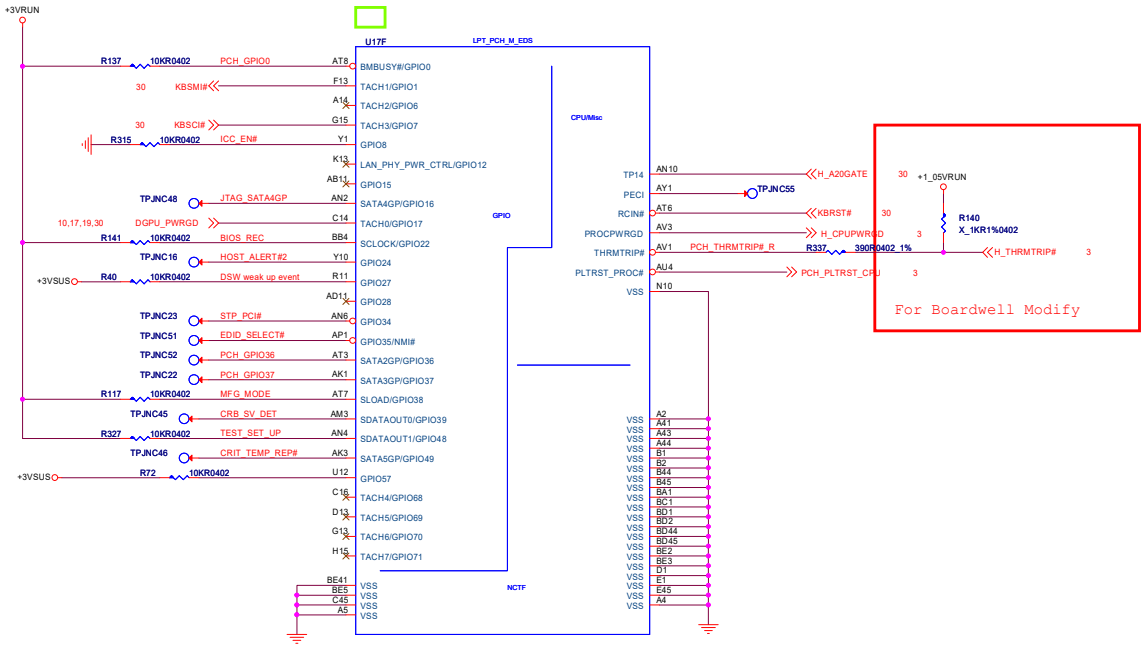

Title	PCH-6 (GPIO,MISC)		
Size Custom	Document Number MS_16GF		Rev 11
Date: Friday, January 03, 2014	Sheet 25 of 53		

Lynx Point (PCIE,USB)

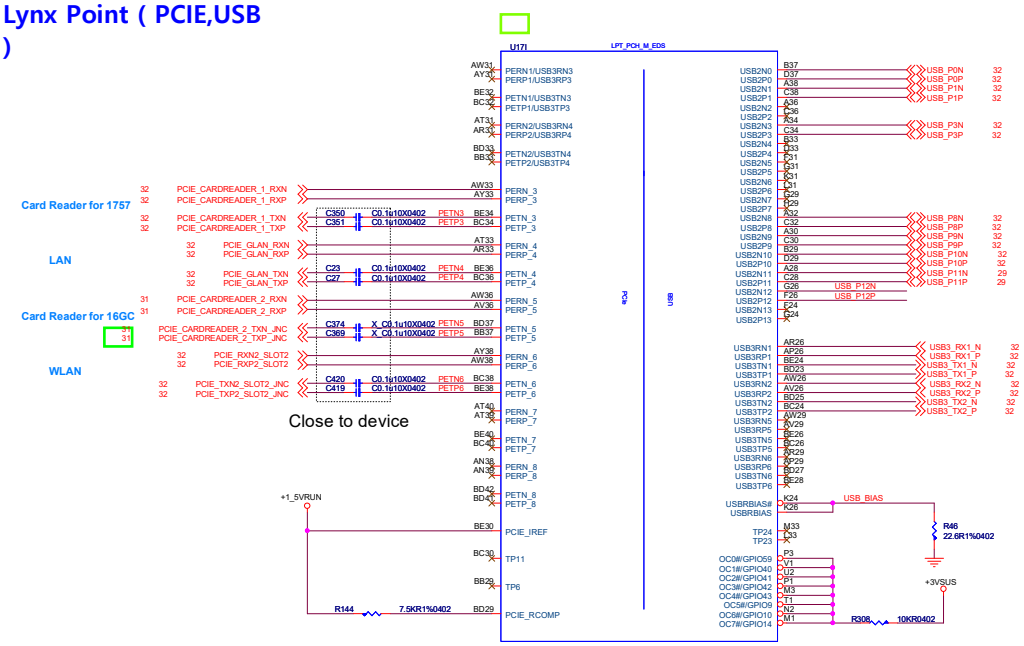

USB			
USB 2.0	USB 3.0	Device	Note
0	1	USB 3.0 Port 1	(16GCB/1757B)
1	2	USB 3.0 Port 2	(16GCB/1757B)
2			NC
3			NC
4			NC
5			NC
6			NC
7			NC
8		USB 2.0 Port	(16GCB)
9		USB 2.0 Port	(16GCA/1757A)
10		WLAN	
11		WebCam	
12		USB 2.0 Port	(1757E)
13			NC
	3		NC
	4		NC
	5		NC
	6		NC

For MS-1757E Board

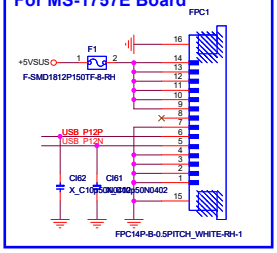

Title	PCH-7 (PCIE,USB)		
Size Custom	Document Number MS_16GF		Rev 11
Date: Friday, January 03, 2014	Sheet 26 of 53		

Lynx Point (Power)

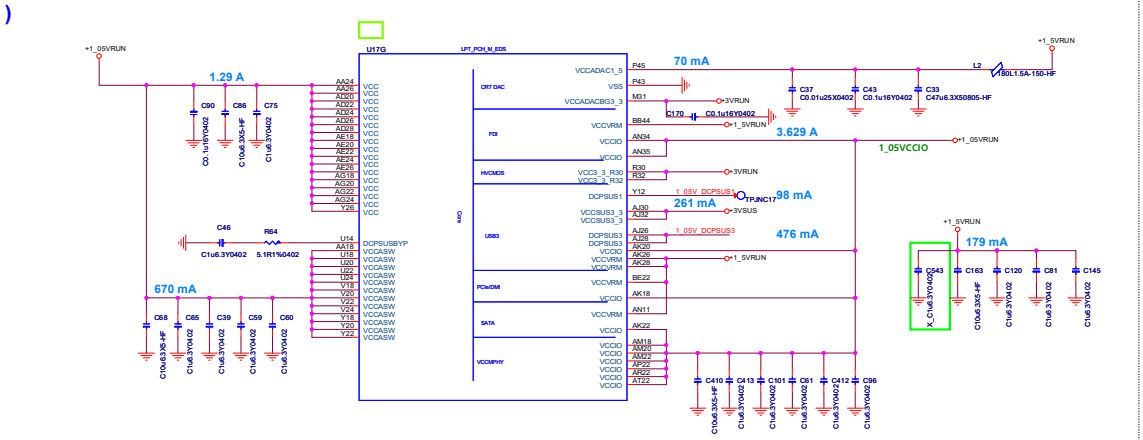

Lynx Point (GND)

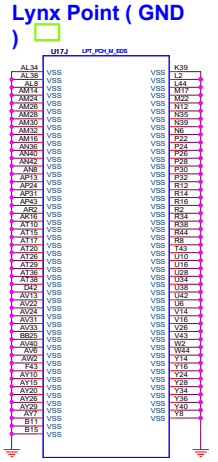

Lynx Point (Power)

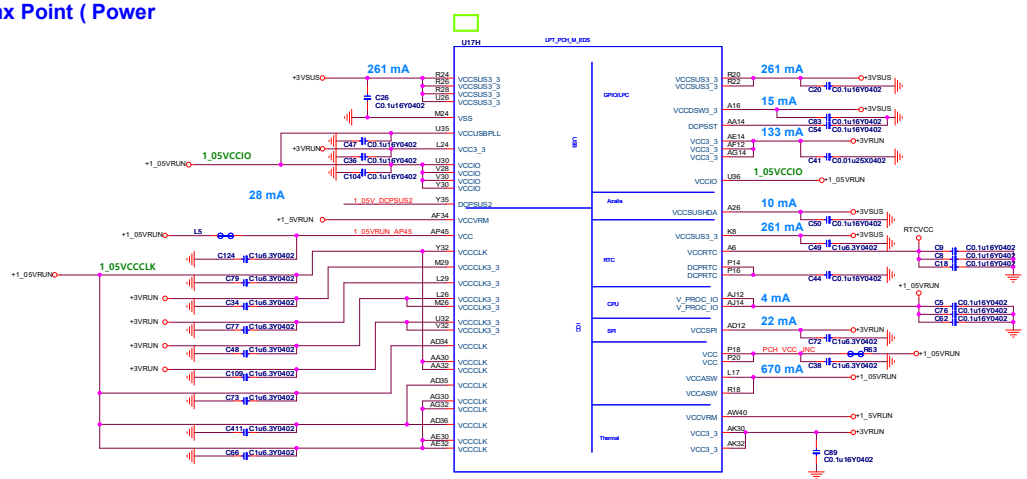

Title	PCH-8 (Power,GND)
Size	Document Number
Custom	MS_16GF
Rev	11
Date:	Friday, January 03, 2014
Sheet	27 of 53

eDP to LVDS

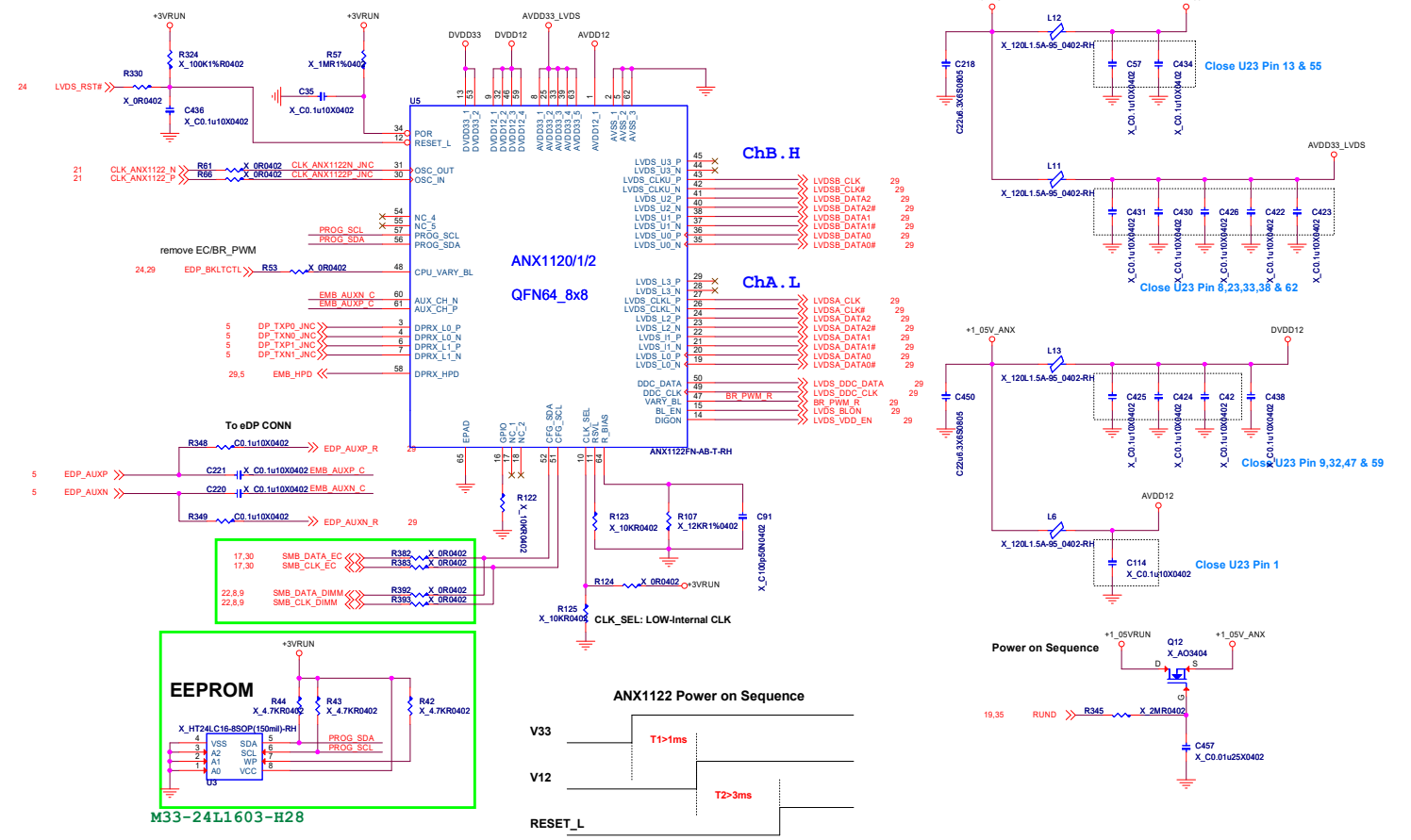

Title	eDP to LVDS (ANX1122)		
Size: Custom	Document Number: MS_16GF		Rev: 11
Date: Friday, January 03, 2014	Sheet 28 of 53		

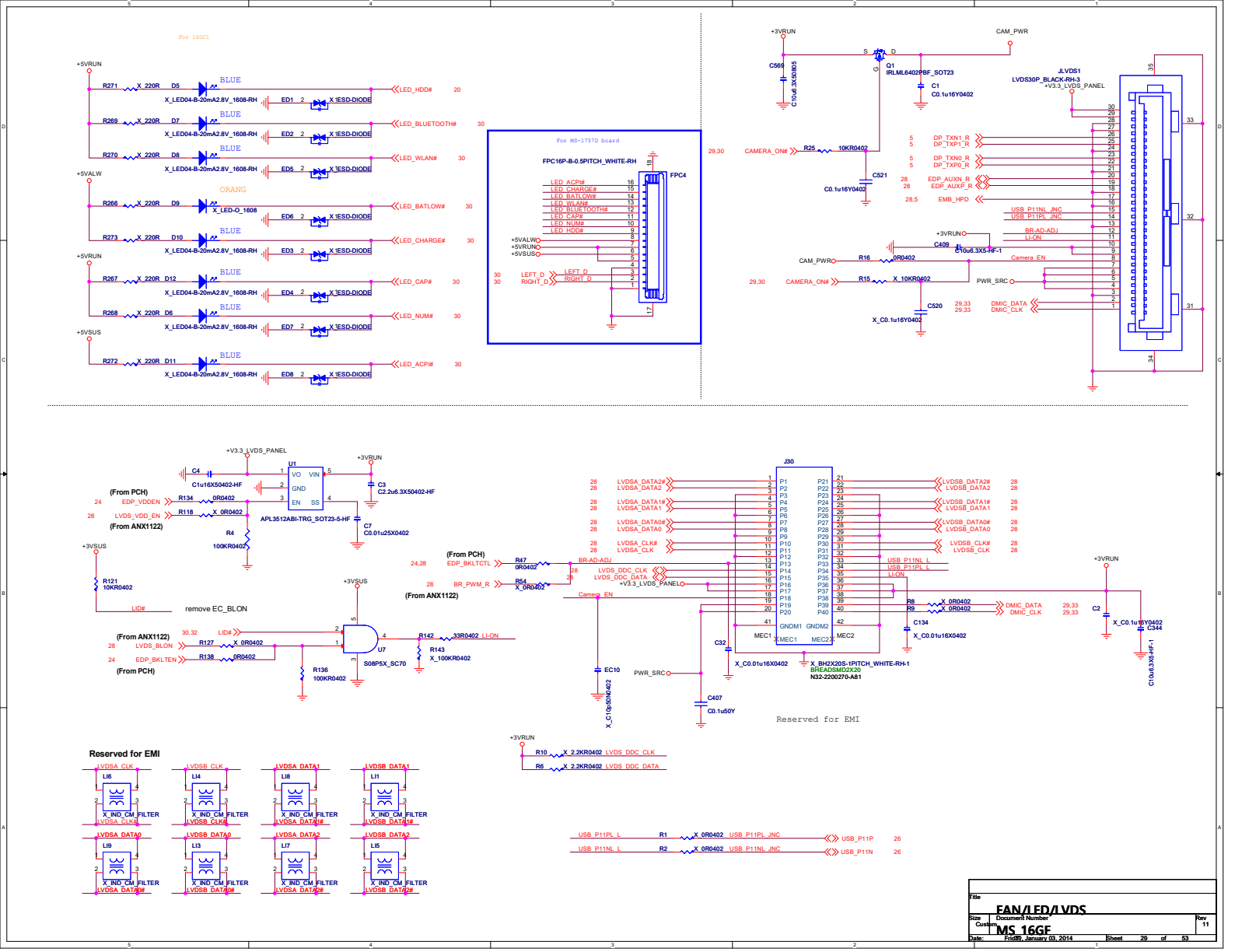

Title	FAN/LED/LVDS		
Size: Custom	Document Number: MS_16GF		Rev: 11
Date: Friday, January 03, 2014	Sheet 29 of 53		

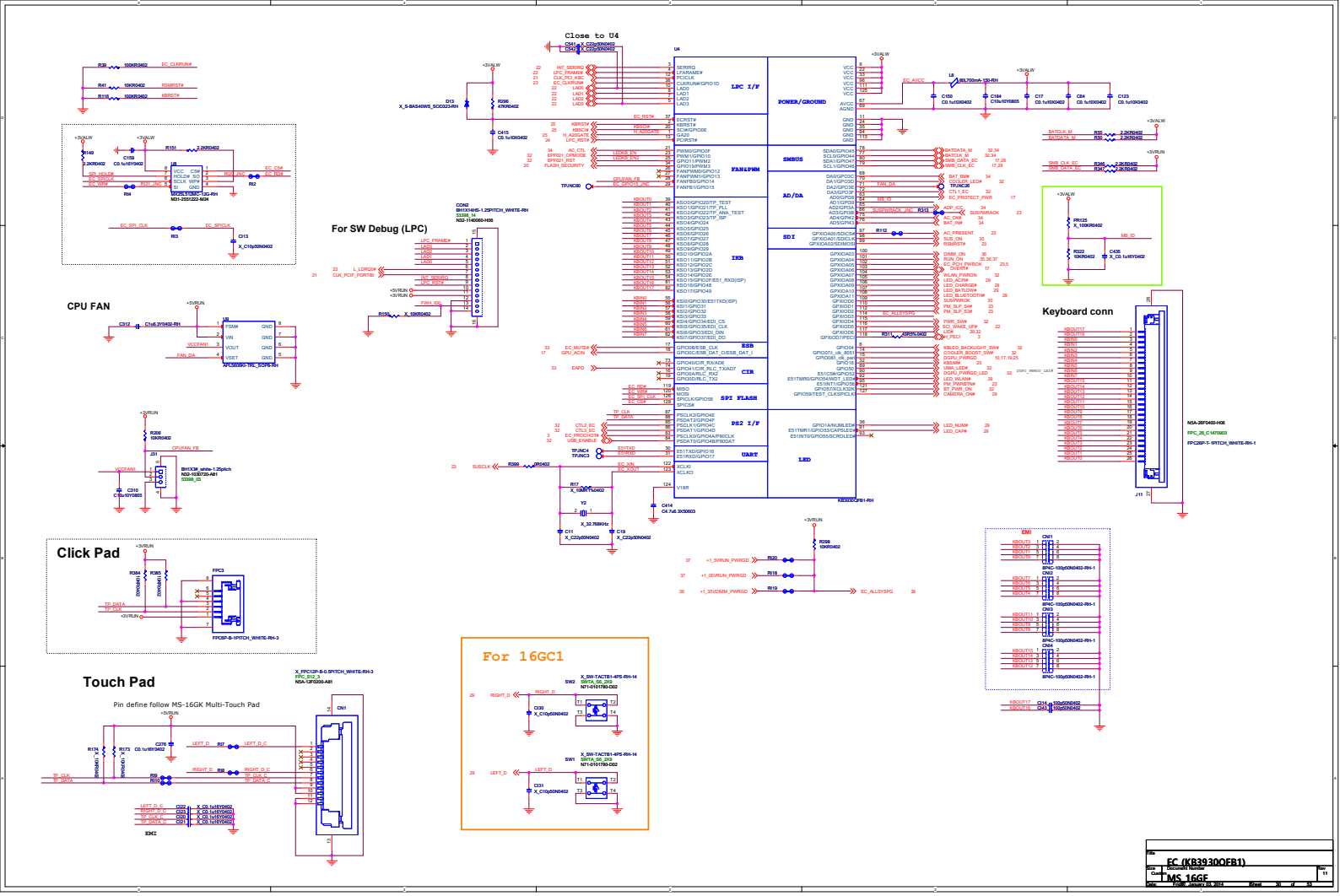

Title	EC (KB3930QFB1)	
Size	Document Number	Rev
Custom	MS_16GE	1.0
Date	Friday, January 03, 2014	Sheet 30 of 53

CardReader

RTS5249 Colay RTS5227

Pin 13/15/16/22/23/24/25/26 definition are different from RTS5227

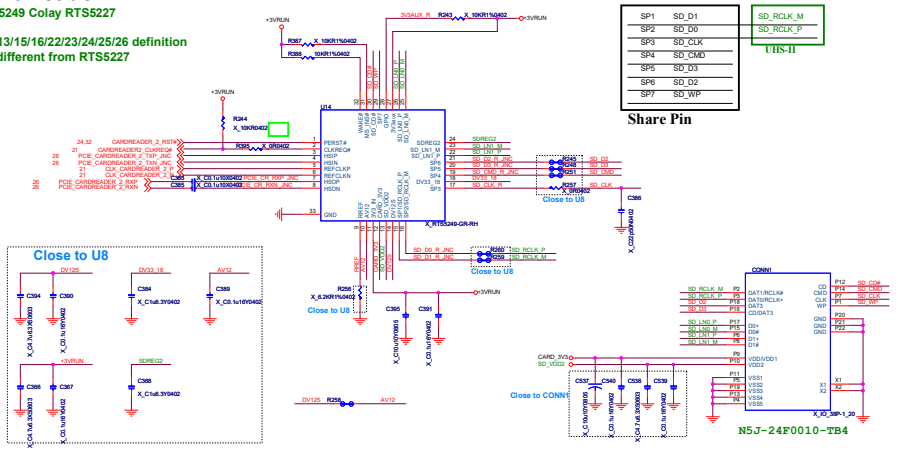

mSATA SSD

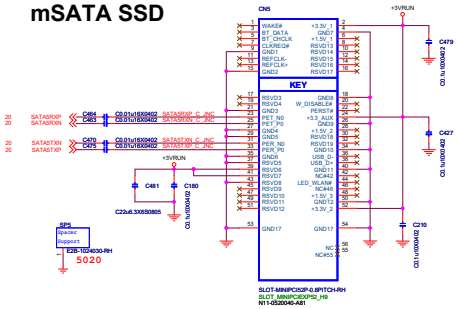

mSATA SSD (Near WLAN CONN)

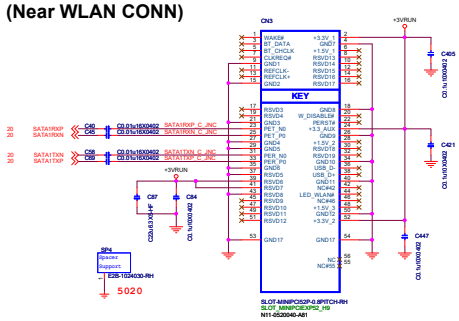

SATA HDD

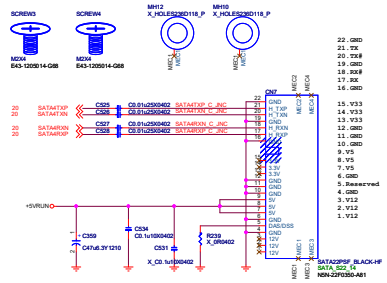

SATA ODD

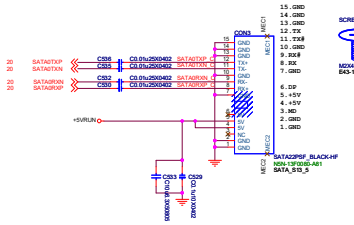

Title	Card Reader/HDD/SSD/ODD		
Size	Document Number		Rev
Custom	MS_16GF		11
Date:	Friday, January 03, 2014	Sheet 31 of 53	

Board B - Audio/HDMI/USB 3.0

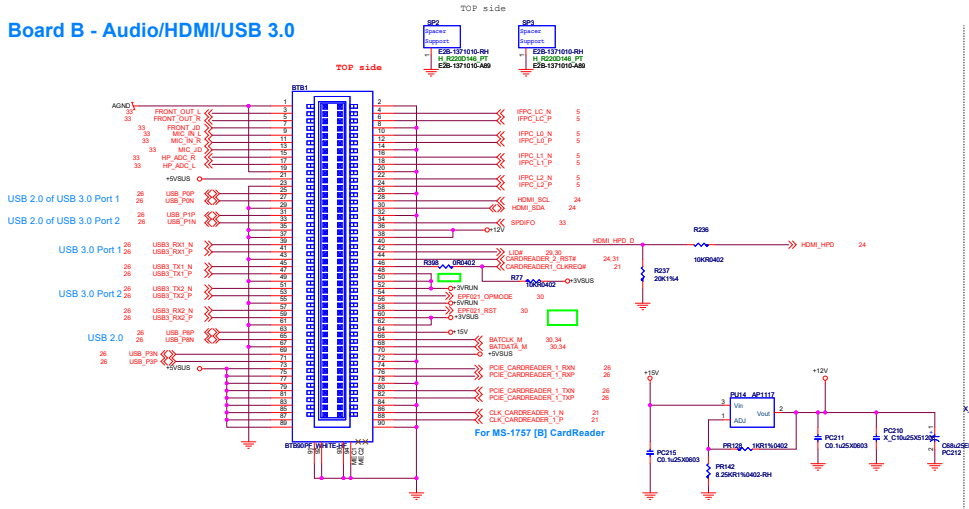

To 16GCC(Power Key Board/ FPCC1

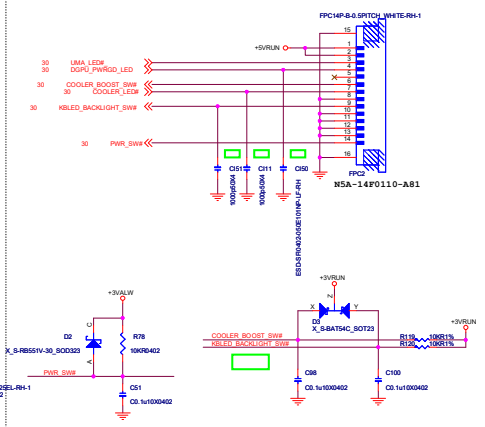

Board A - CRT/USB/WLAN/BT/LAN

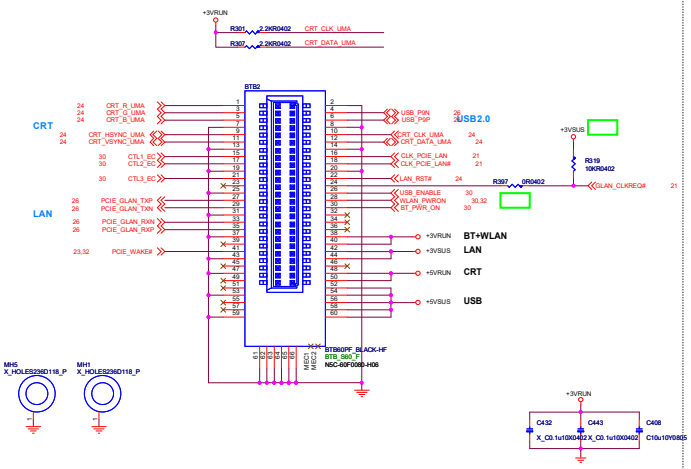

WLAN CARD

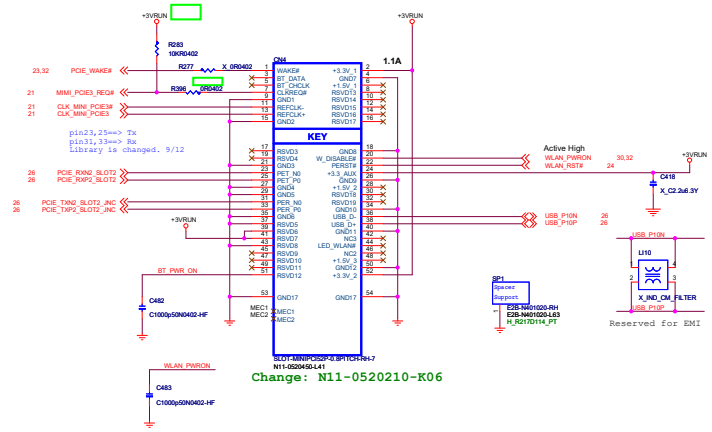

Title	BTB Connector
Size	Document Number
Custom	MS_16GF
Rev	11
Date:	Friday, January 03, 2014
Sheet	32 of 53

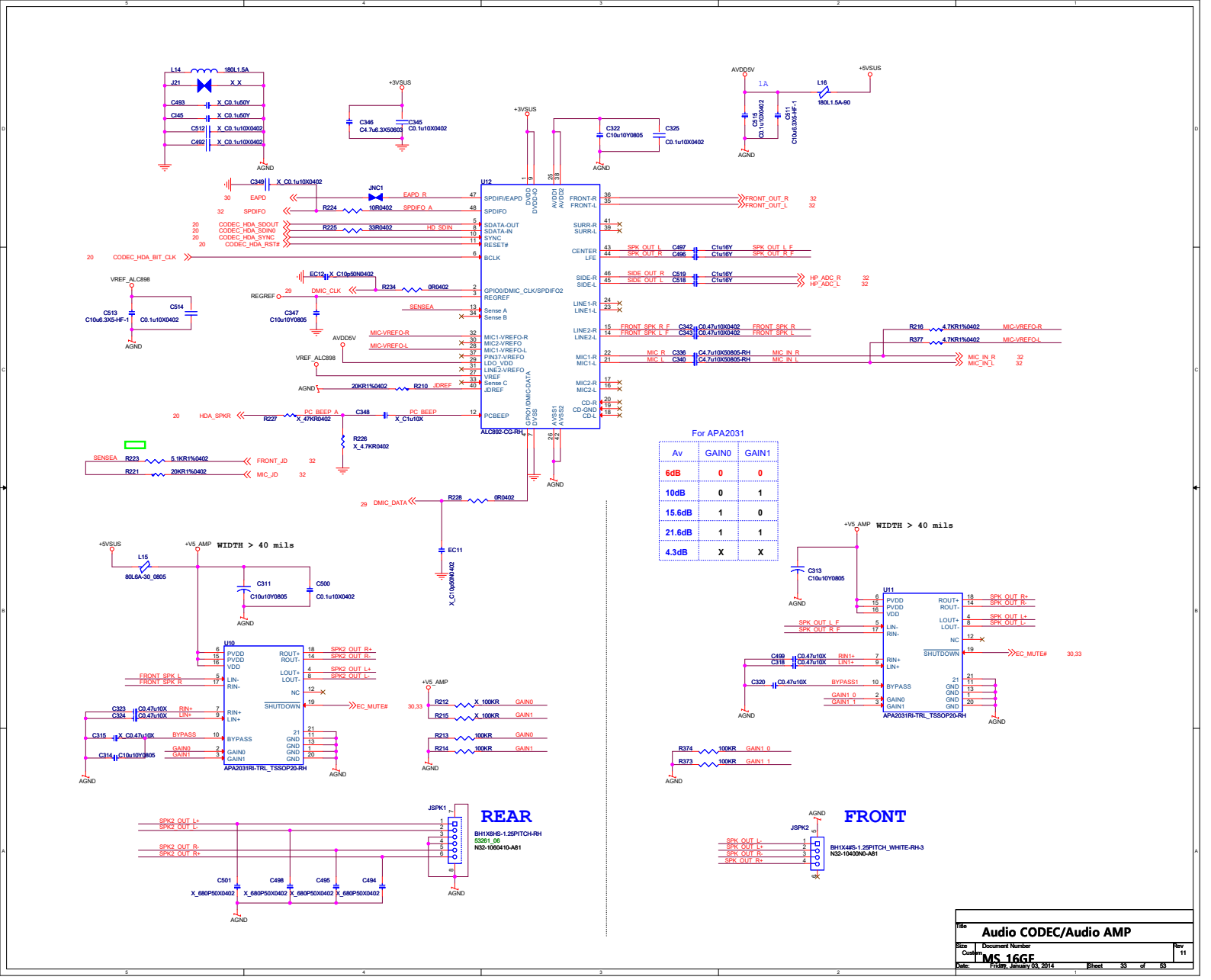

For APA2031

Av	GAIN0	GAIN1
6dB	0	0
10dB	0	1
15.6dB	1	0
21.6dB	1	1
4.3dB	X	X

Title	Audio CODEC/Audio AMP
Size	Custom
Document Number	MS_16GF
Rev	11
Date:	Friday, January 03, 2014
Sheet	33 of 53

Battery Select

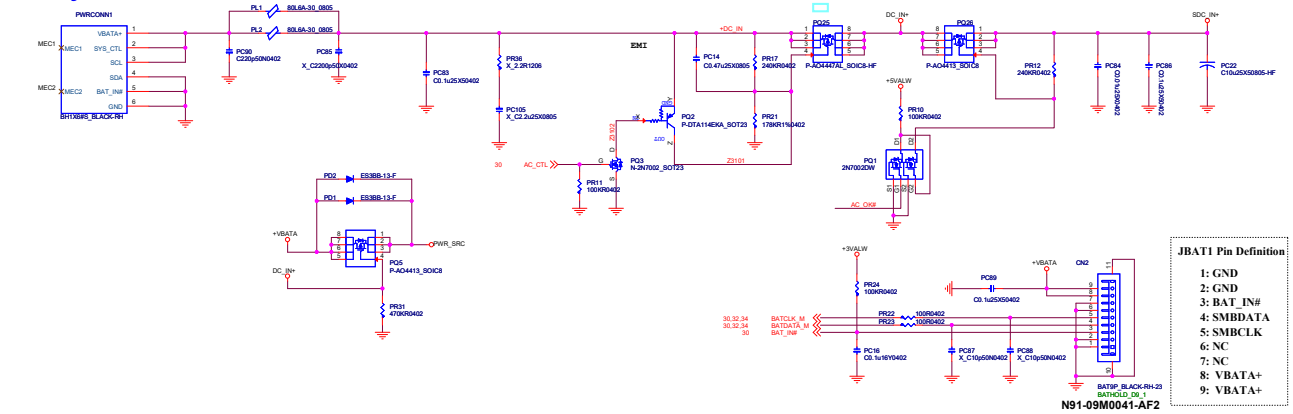

JBAT1 Pin Definition

1: GND
2: GND
3: BAT_IN#
4: SMBDATA
5: SMBCLK
6: NC
7: NC
8: VBATA+
9: VBATA+

Battery Charger

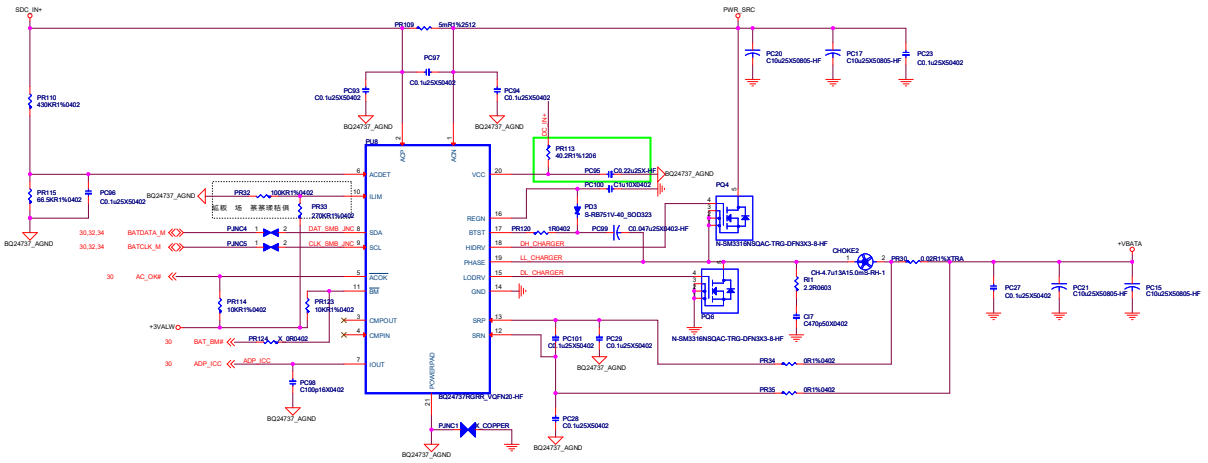

Title	Battery Select/Charger		
Size: Custom	Document Number: MS_16GF		Rev: 11
Date: Friday, January 03, 2014	Sheet 34 of 53		

System Power

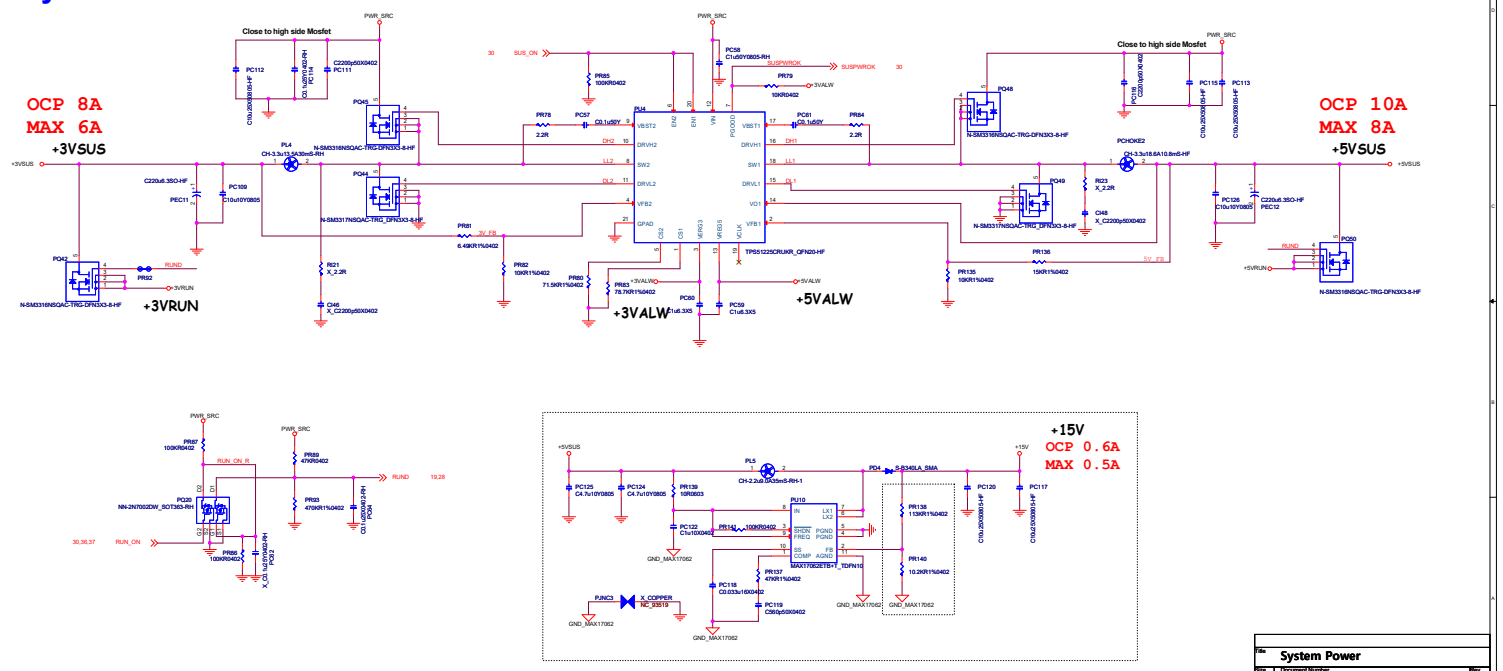

Title: System Power			
Size: Custom	Document Number: MS_16GF		Rev: 11
Date: Friday, January 03, 2014		Sheet 35 of 53	

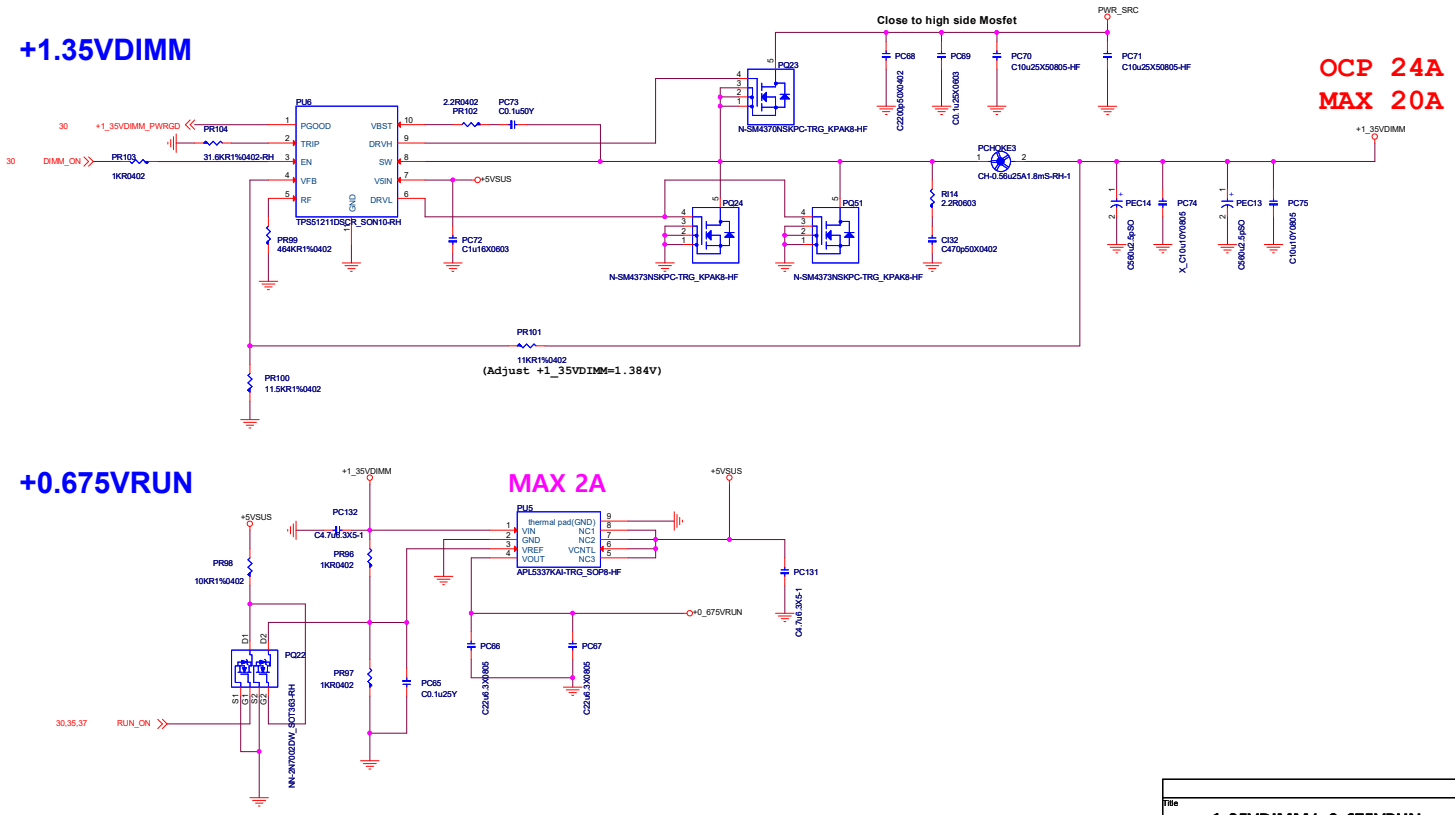

Title	+1_35VDIMM/+0_675VRUN		
Size: Custom	Document Number: MS_16GF		Rev: 11
Date: Friday, January 03, 2014		Sheet 36 of 53	

+1.05VRUN

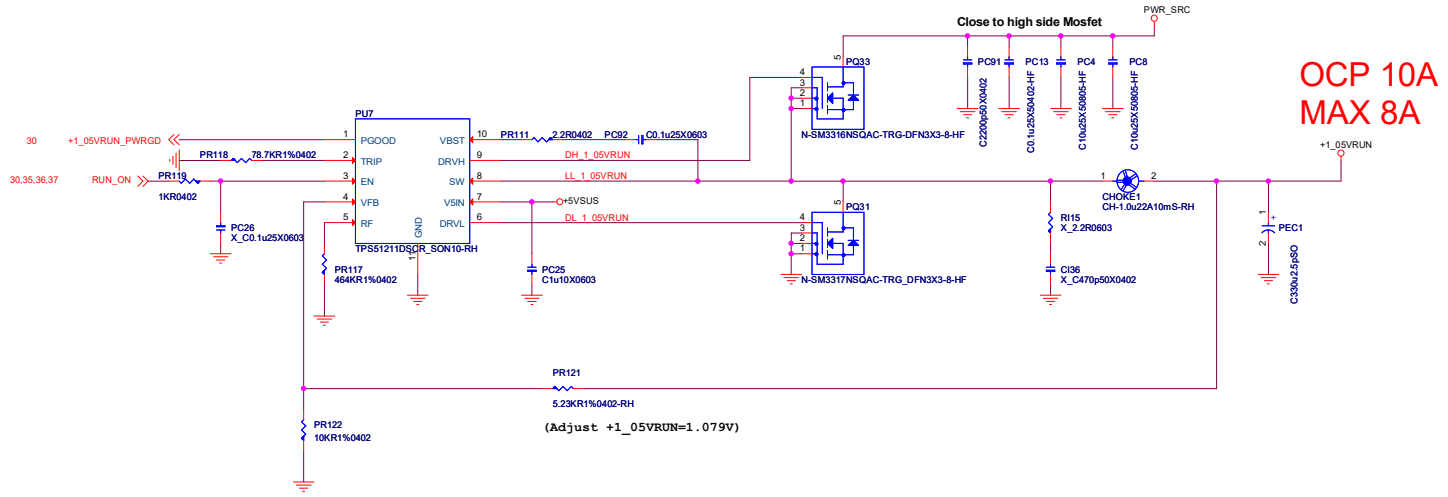

+1.5VRUN

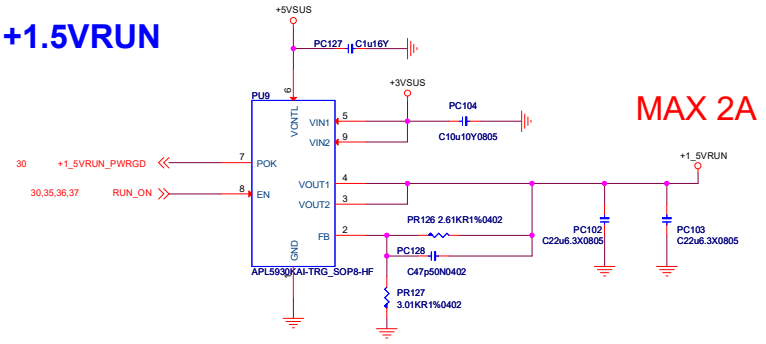

Title	+1_05VRUN / +1_5VRUN		
Size Custom	Document Number MS_16GF		Rev 11
Date: Friday, January 03, 2014		Sheet 37 of 53	

DGPU POWER / NCP81172

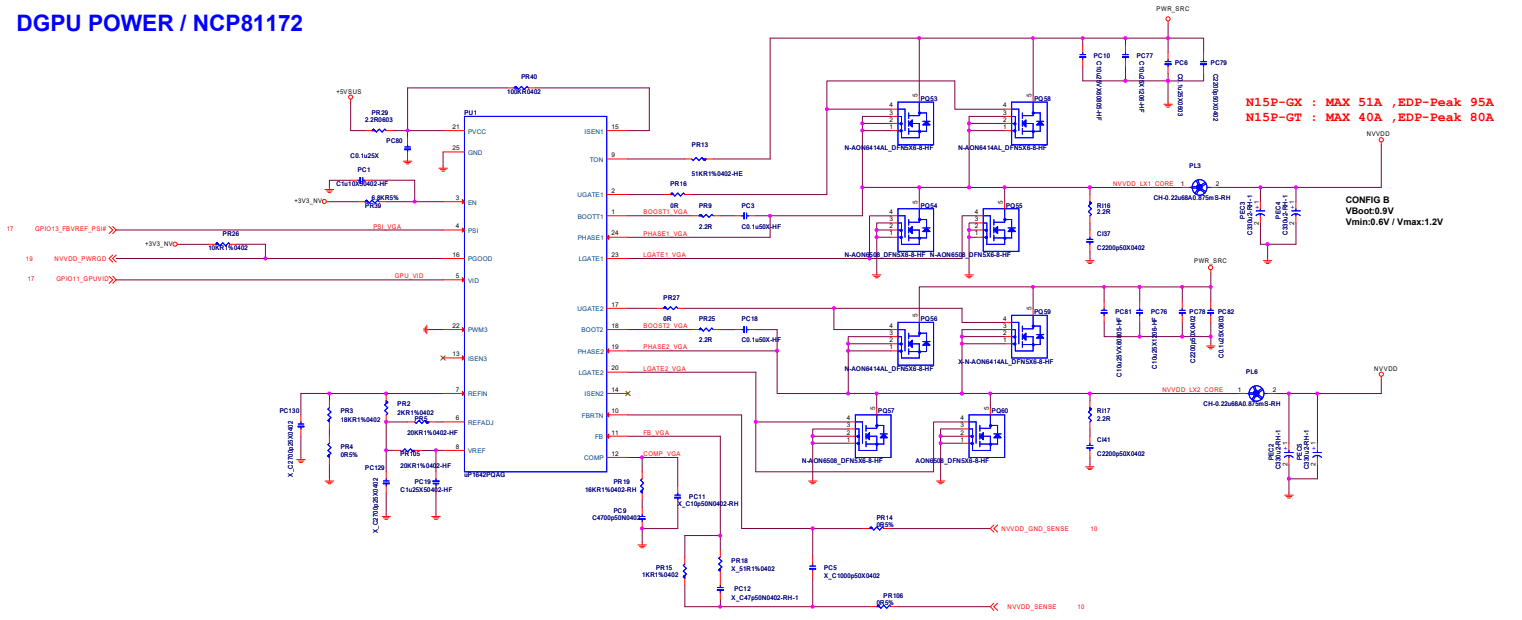

CPU Core Power(ISL95812HRZ)

OCP 103A
MAX 85A

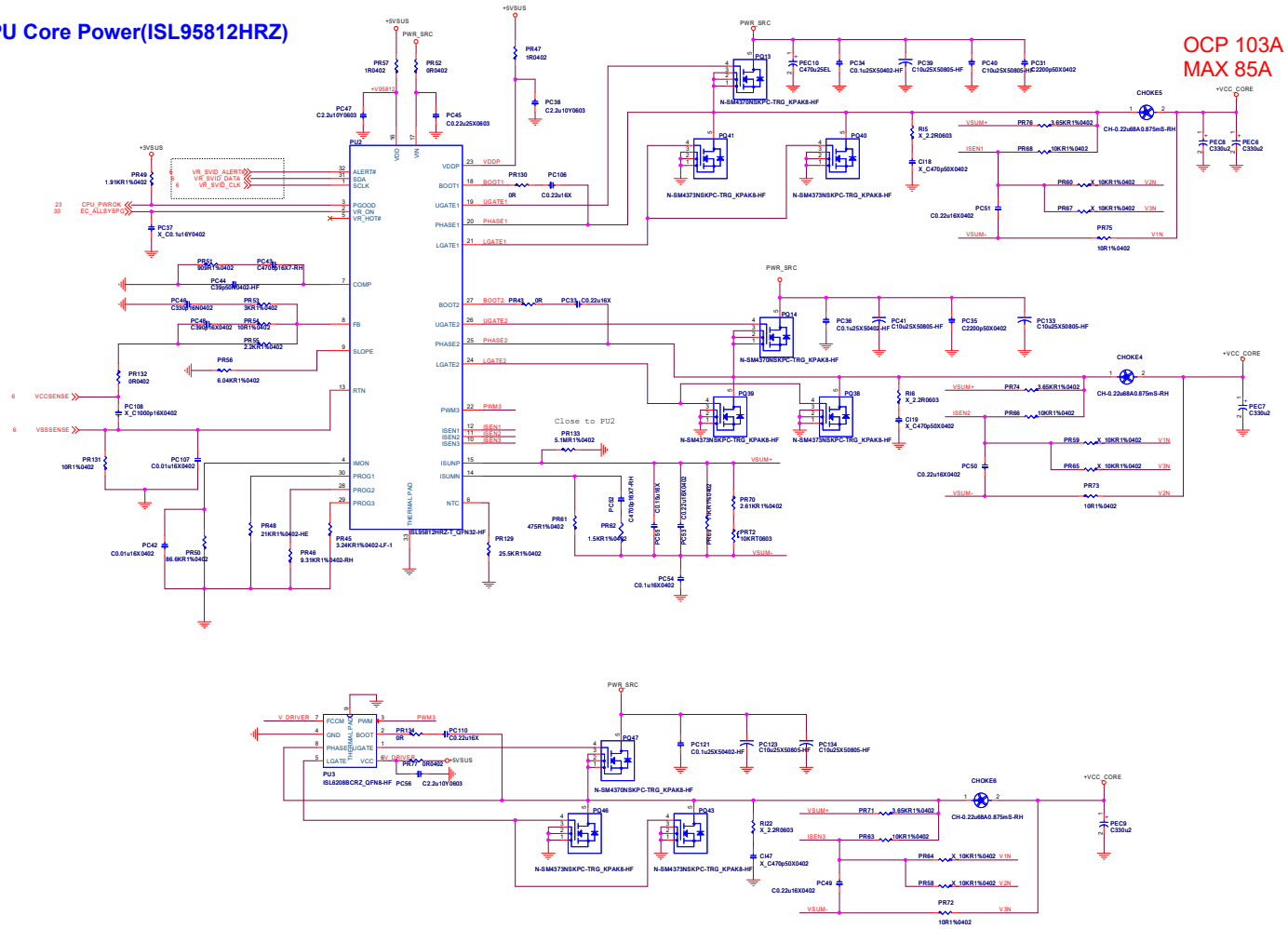

Title	CPU Power
Size	Document Number
Custom	MS_16GF
Rev	11
Date:	Friday, January 03, 2014
Sheet	38 of 53

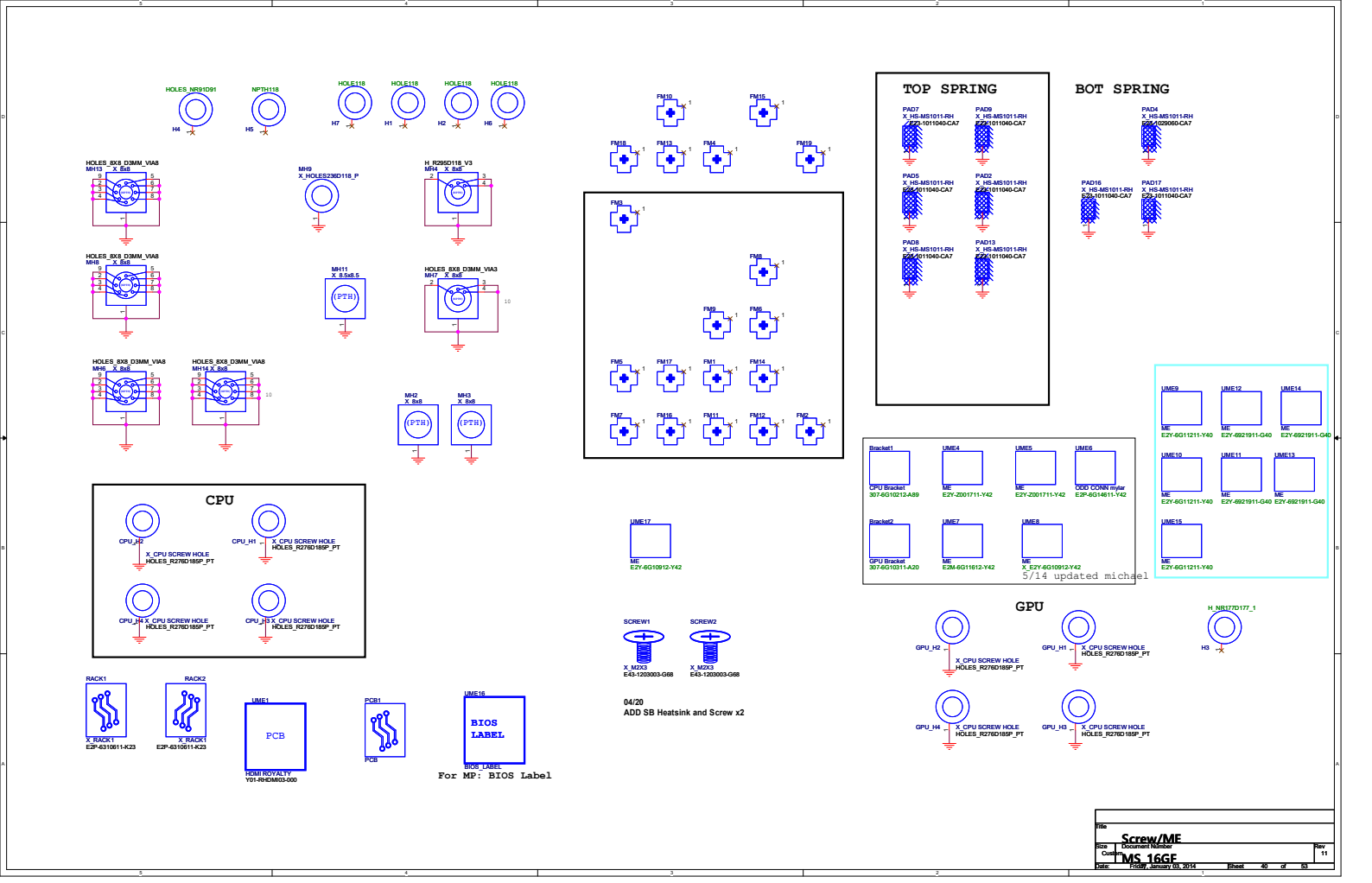

File	Screw/ME		
Size: Custom	Document Number: MS_16GF		Rev: 11
Date: Friday, January 03, 2014	Sheet 40 of 53		

Top Spring

PAD6
X_HS-MS1011-RH
E23-1011040-CA7

PAD11
X_HS-MS1011-RH
E23-5551040-CA7

PAD1
X_HS-MS1011-RH
E23-5551040-CA7

PWR_SRC

Close to PQ31, PQ34

CI42 X_C0.1u25Y0402
CI5 X_C0.1u25Y0402

SDC_IN+

CI3 X_C0.1u25Y0402
CI38 X_C0.1u25Y0402

PWR_SRC

CI1 X_C0.1u25Y0402
CI15 X_C0.1u25Y0402

+5VSUS

CI40 X_C0.1u25Y0402
CI29 X_C0.1u25Y0402
CI34 X_C0.1u25Y0402

+5VRUN

CI9 X_1000p50X4
CI17 X_C0.1u25Y0402
CI49 X_C0.1u25Y0402

BOT Spring

PAD12
X_HS-MS1011-RH
E23-1011040-CA7

PAD15
X_HS-MS1011-RH
E23-1011040-CA7

PAD3
X_HS-MS1011-RH
E23-5551040-CA7

PAD10
X_HS-MS1011-RH
E23-5551040-CA7

+VBATA

CI6 C0.1u25Y0402
CI2 C0.1u25Y0402
CI39 C0.1u25Y0402

FBVDDQ

CI25 X_100p50N0402
CI27 X_100p50N0402
CI26 X_100p50N0402
CI24 X_100p50N0402
CI16 X_100p50N0402

+3VRUN

CI44 X_C0.1u25Y0402
CI28 X_C0.1u25Y0402
CI4 X_C0.1u25Y0402

+3VSUS

CI8 X_C0.1u25Y0402
CI12 X_C0.1u25Y0402
CI33 X_C0.1u25Y0402

CI64 X_C10p50N0402

+1_35VDIMM

CI52 X_100p50N0402
CI53 X_100p50N0402
CI54 X_100p50N0402
CI55 X_100p50N0402
CI56 X_100p50N0402
CI57 X_100p50N0402
CI58 X_100p50N0402
CI59 X_100p50N0402
CI60 X_100p50N0402

45 OHM

J16 2 L3_6mil_45_Ohm 1 X_H1X2M_BLACK-RH

J4 2 L4_6mil_45_Ohm 1 X_H1X2M_BLACK-RH

J3 2 L6_5mil_45_Ohm 1 X_H1X2M_BLACK-RH

50 OHM

J13 2 L3_4.5mil_50_Ohm 1 X_H1X2M_BLACK-RH

J22 2 L4_4.5mil_50_Ohm 1 X_H1X2M_BLACK-RH

80 OHM

J9 2 L1_DIFF_5/4.5/5_80_Ohm+ 1 X_H1X2M_BLACK-RH

J6 2 L1_DIFF_5/4.5/5_80_Ohm- 1 X_H1X2M_BLACK-RH

J7 2 L3_DIFF_5/4/5_80_Ohm+ 1 X_H1X2M_BLACK-RH

J8 2 L3_DIFF_5/4/5_80_Ohm- 1 X_H1X2M_BLACK-RH

J24 2 L6_DIFF_5/4.5/5_80_Ohm+ 1 X_H1X2M_BLACK-RH

J23 2 L6_DIFF_5/4.5/5_80_Ohm- 1 X_H1X2M_BLACK-RH

85 OHM

J12 2 L1_DIFF_4/4/4_85_Ohm+ 1 X_H1X2M_BLACK-RH

J10 2 L1_DIFF_4/4/4_85_Ohm- 1 X_H1X2M_BLACK-RH

J15 2 L3_DIFF_4/4/4_85_Ohm+ 1 X_H1X2M_BLACK-RH

J14 2 L3_DIFF_4/4/4_85_Ohm- 1 X_H1X2M_BLACK-RH

J25 2 L4_DIFF_4/4/4_85_Ohm+ 1 X_H1X2M_BLACK-RH

J27 2 L4_DIFF_4/4/4_85_Ohm- 1 X_H1X2M_BLACK-RH

J28 2 L6_DIFF_4/4/4_85_Ohm+ 1 X_H1X2M_BLACK-RH

J26 2 L6_DIFF_4/4/4_85_Ohm- 1 X_H1X2M_BLACK-RH

90 OHM

J19 2 L1_DIFF_4/5/4_90_Ohm+ 1 X_H1X2M_BLACK-RH

J20 2 L1_DIFF_4/5/4_90_Ohm- 1 X_H1X2M_BLACK-RH

J18 2 L3_DIFF_4/5/4_90_Ohm+ 1 X_H1X2M_BLACK-RH

J17 2 L3_DIFF_4/5/4_90_Ohm- 1 X_H1X2M_BLACK-RH

J1 2 L6_DIFF_4/5/4_90_Ohm+ 1 X_H1X2M_BLACK-RH

J2 2 L6_DIFF_4/5/4_90_Ohm- 1 X_H1X2M_BLACK-RH

Title	EMI	
Size: Custom	Document Number: MS_16GF	Rev: 11
Date: Friday, January 03, 2014	Sheet 41 of 53	

60PIN BTB I/O Connector(VGA, LAN, USB)

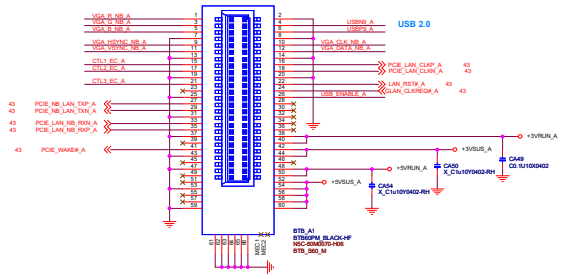

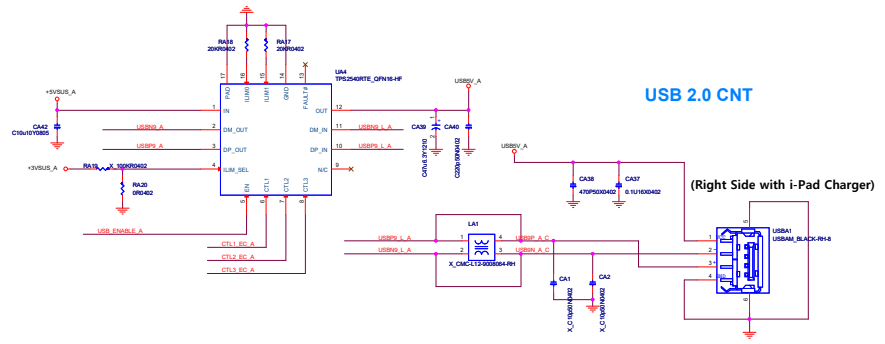

BTB STANDOFF (16GMA)

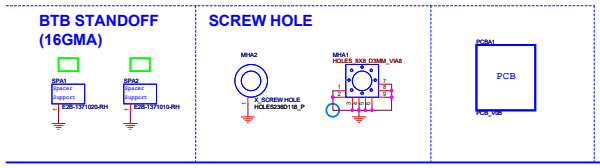

CRT

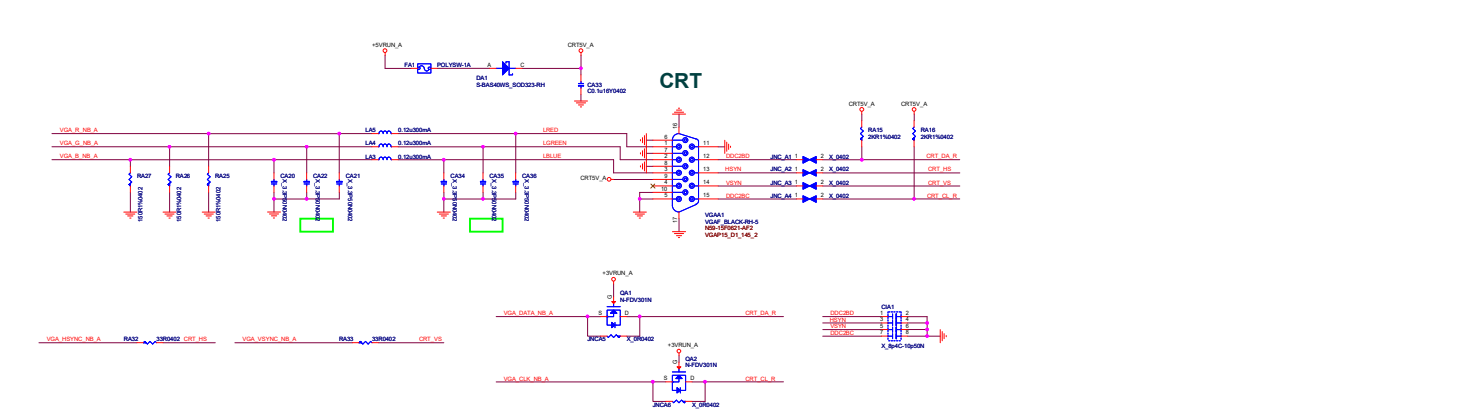

Title	[A] BTB CNT/CRT/USB/WLAN/BT
Size	Document Number
Custom	MS_16GF
Rev	11
Date: Friday, January 03, 2014	Sheet 42 of 50

GIGA LAN(BFN2200A)

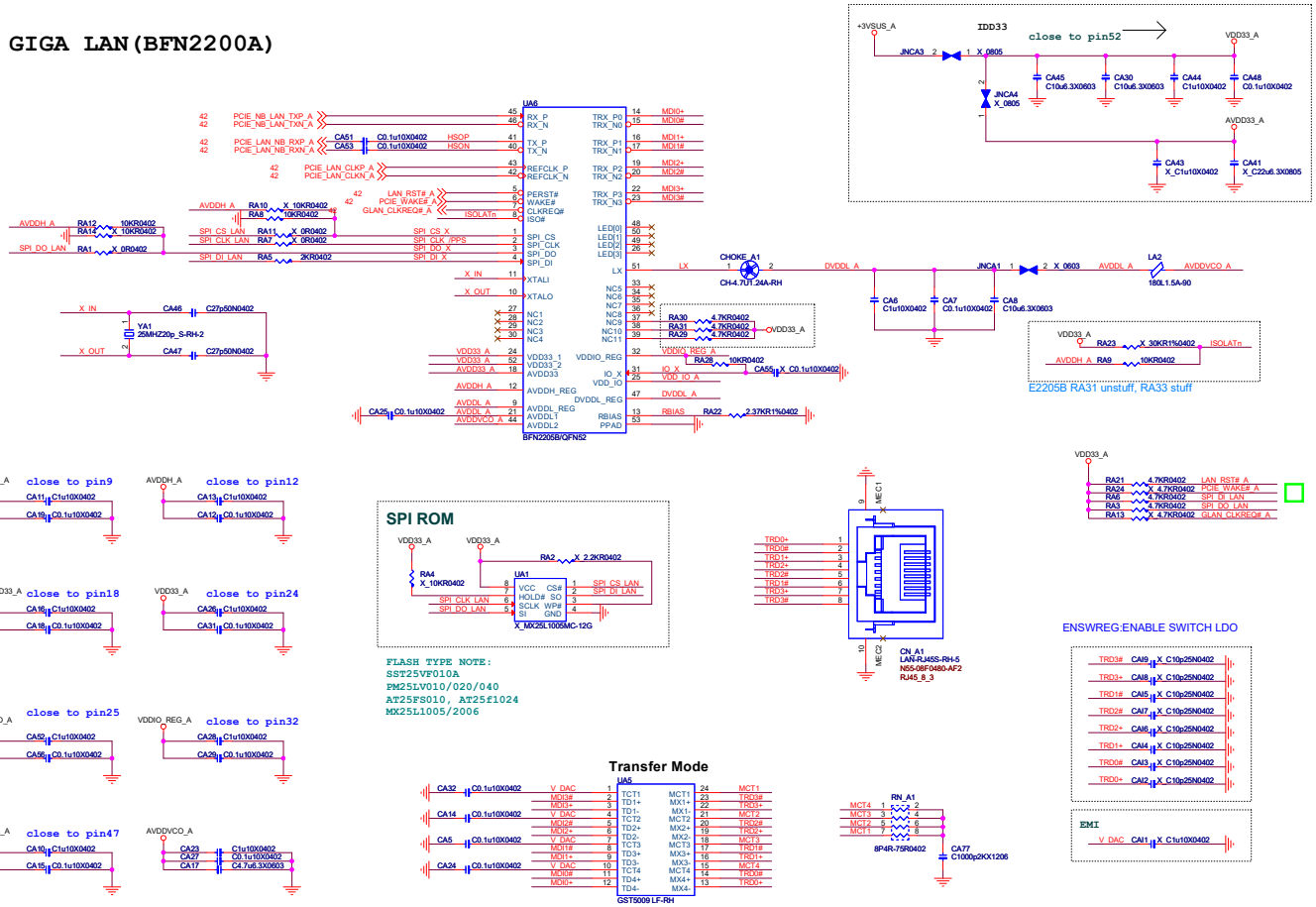

Title	[A] GIGA LAN(BFN2205B)
Size: Custom	Document Number: MS_16GF
Rev	11
Date: Friday, January 03, 2014	Sheet 43 of 50

16GCB board to board CONN1: HDMI,Audio, LED,LID

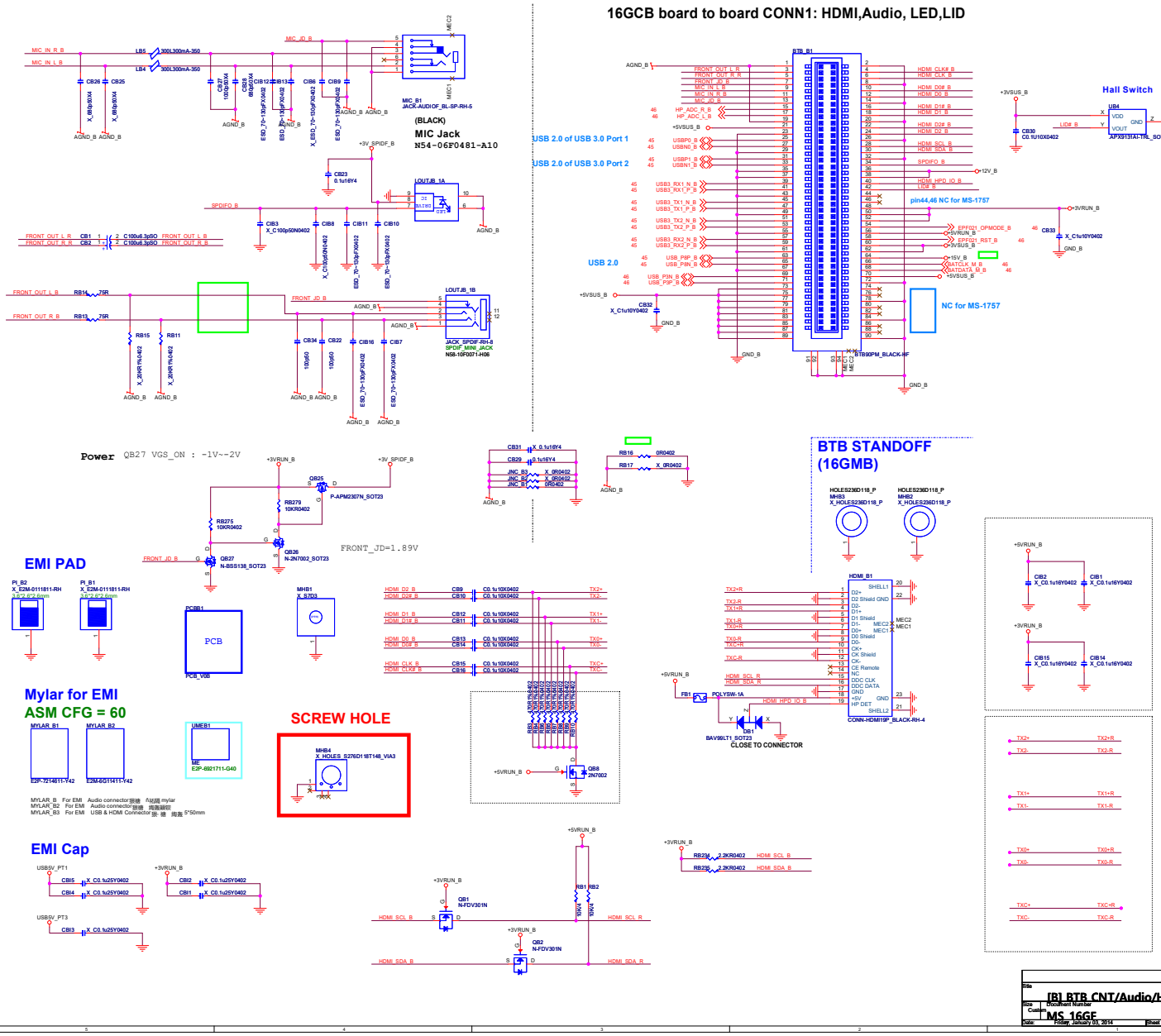

USB 3.0 CNT1

(USB3.0 Left Side - UP)

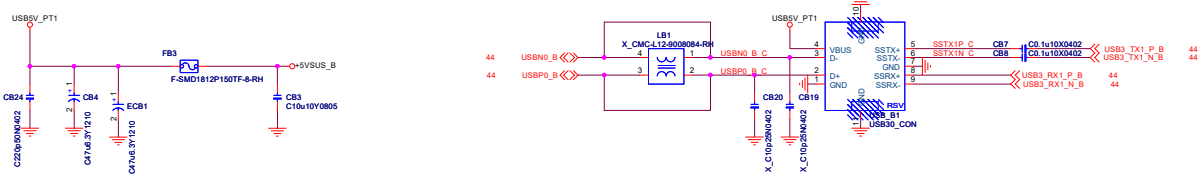

USB 3.0 CNT 2

(USB3.0 Left Side - Down)

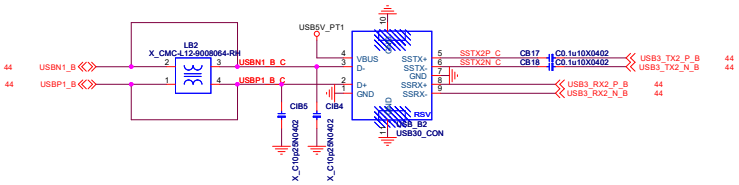

USB 2.0 CNT

(Left Side)

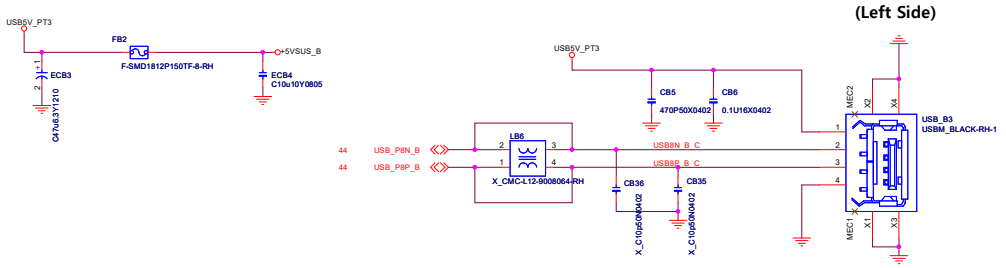

Title	[B] USB3.0x2/USB2.0x1/LED KB		
Size: Custom	Document Number: MS_16GF		Rev: 11
Date: Friday, January 03, 2014	Sheet 45 of 50		

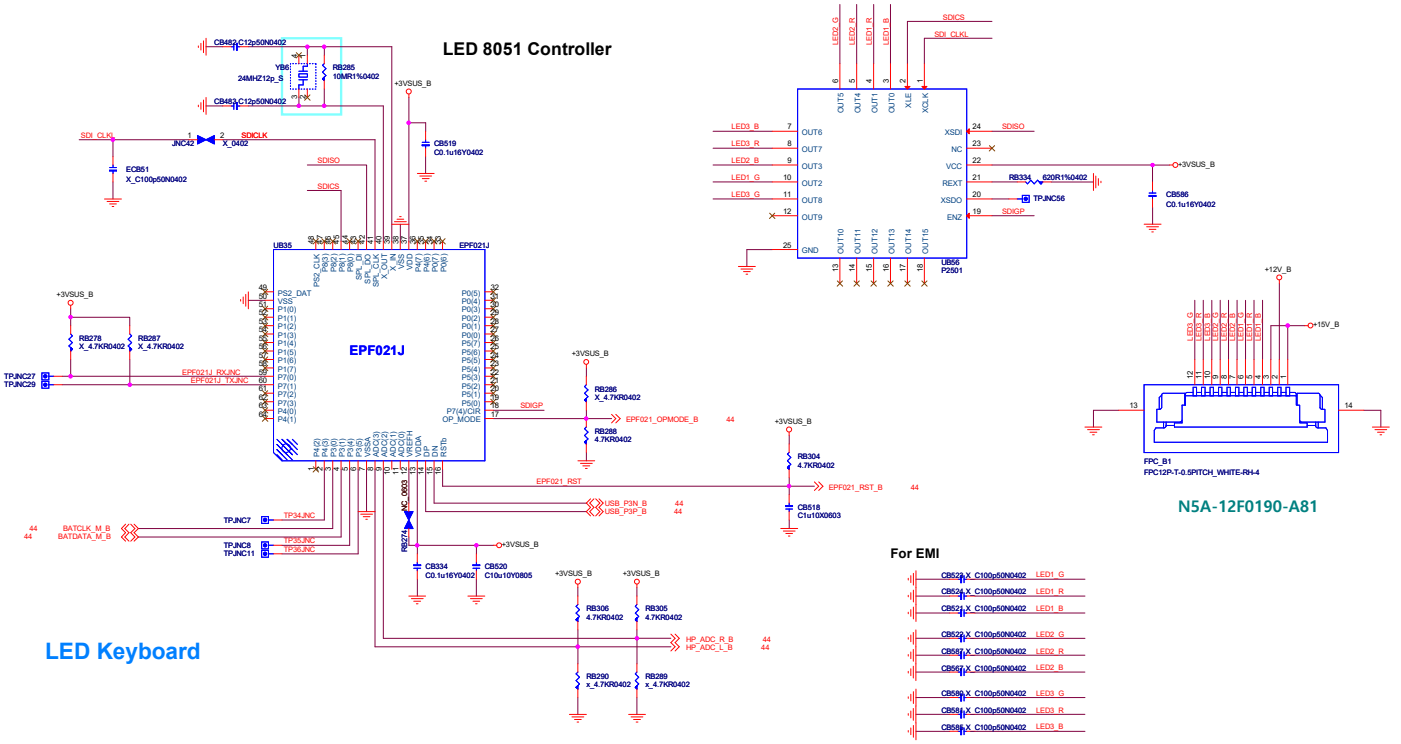

Title	[B] LED KB
Size: Custom	Document Number: MS_16G5
Rev	11
Date: Friday, January 03, 2014	Sheet 46 of 50

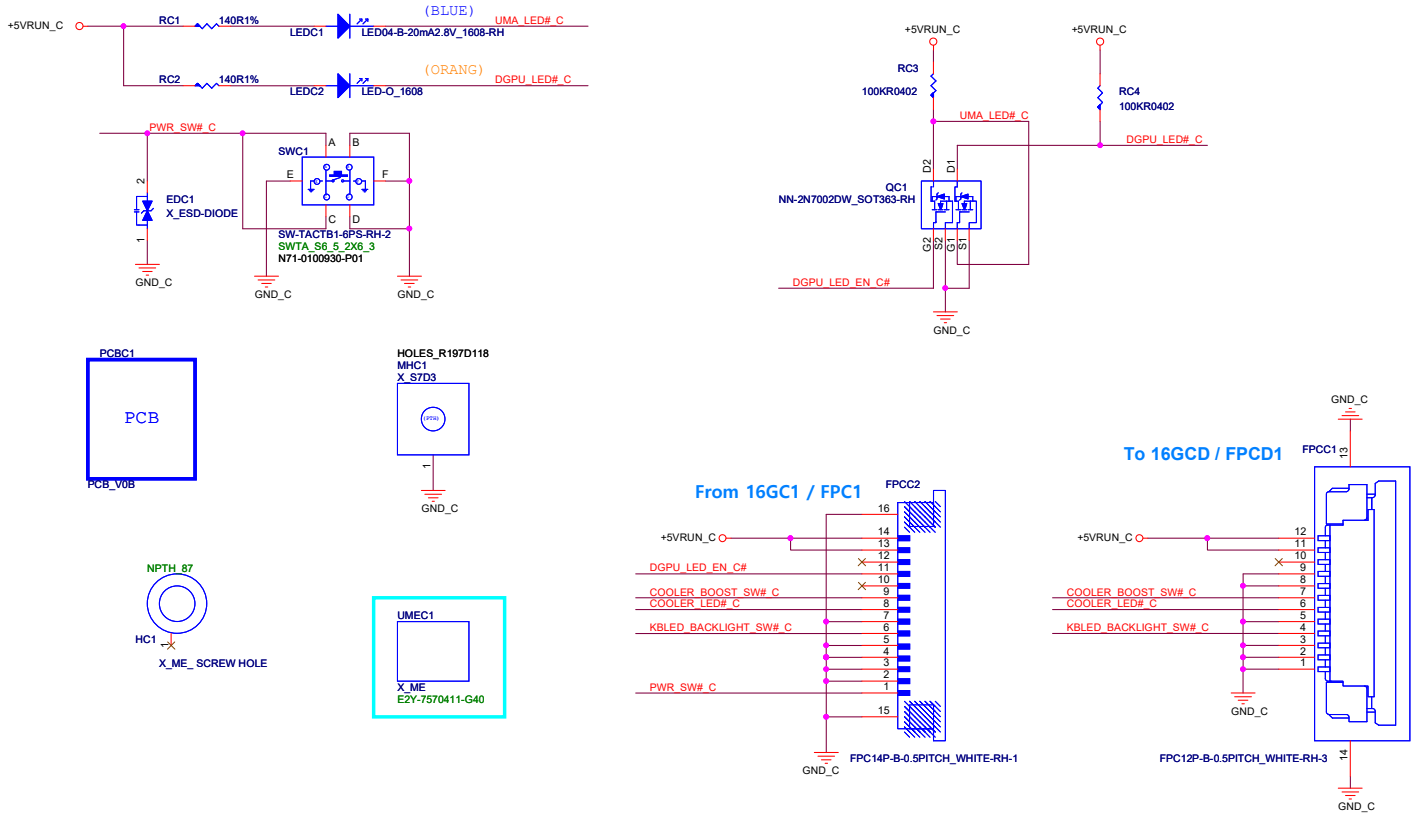

Title	[C] Power SW Board	
Size: Custom	Document Number: MS_16GF	Rev: 11
Date: Friday, January 03, 2014	Sheet 47 of 50	

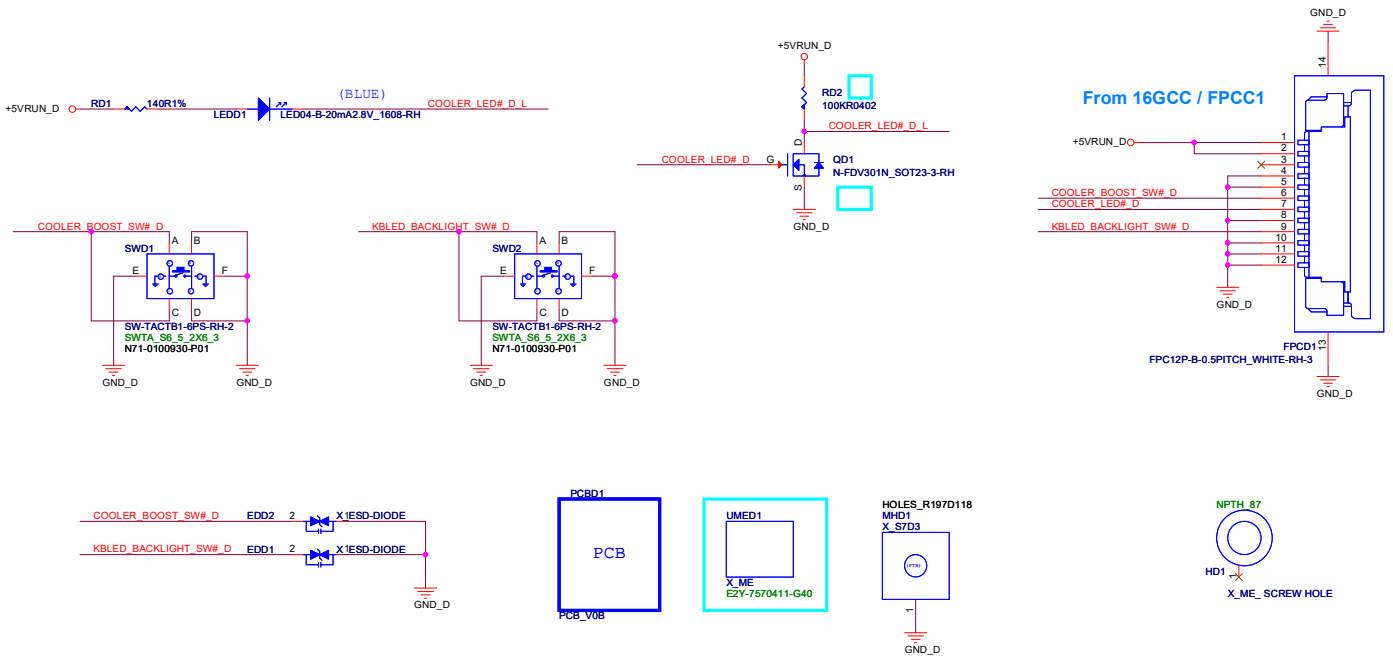

Title	[D] Launch Board		
Size Custom	Document Number MS_16GF		Rev 11
Date: Friday, January 03, 2014	Sheet 48 of 50		

Title	[D] Launch Board
Size A	Document Number MS_16GF
Rev	11
Date:	Friday, January 03, 2014
Sheet	49 of 53

Title	[D] Launch Board
Size A	Document Number MS_16GF
Rev	11
Date:	Friday, January 03, 2014
Sheet	50 of 53

1757 Power Delivery Chart

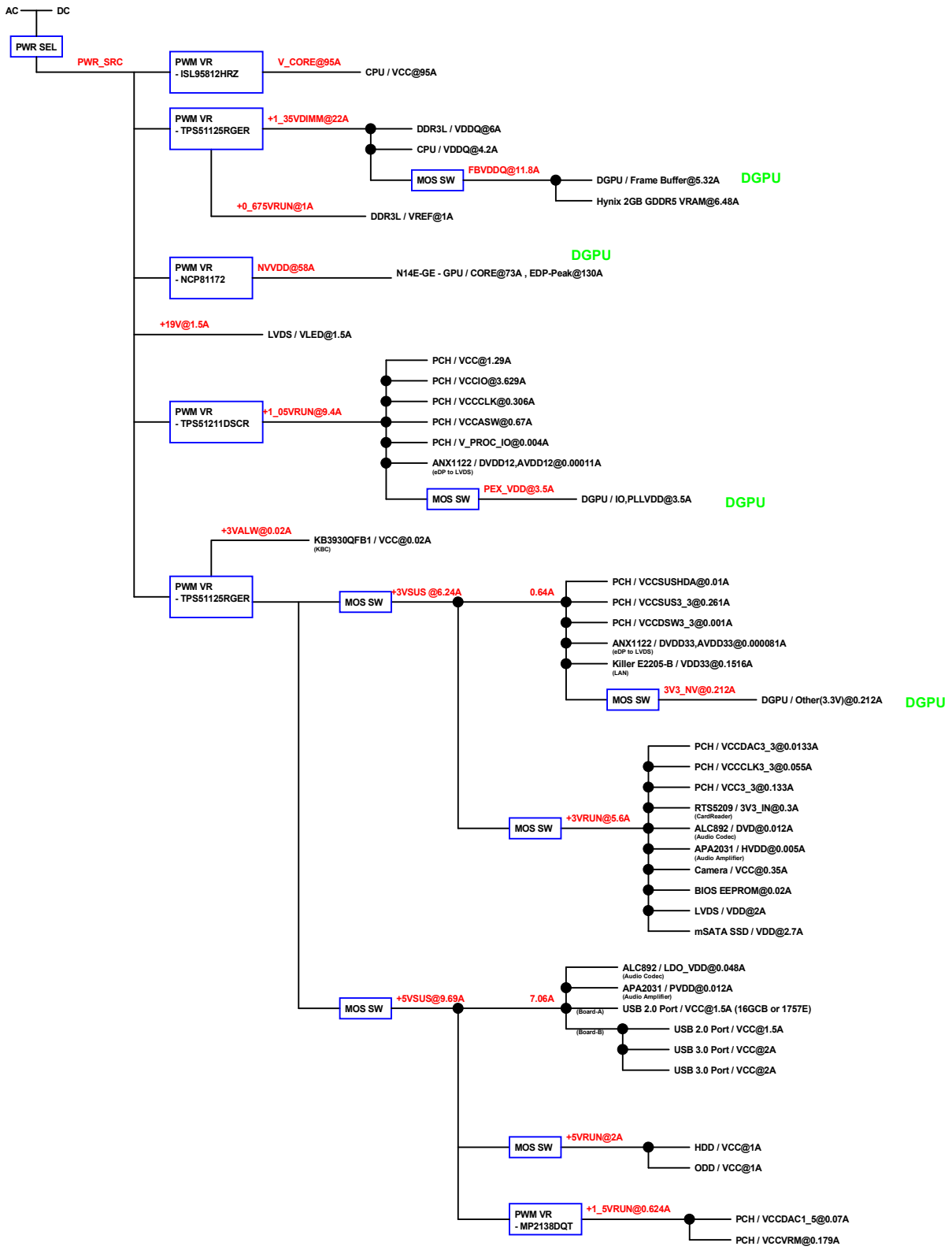

www.repair1.ru

Title	Power Delivery Chart	
Size	Document Number	Rev
Custom	MS_16GF	11
Date: Friday, January 03, 2014	Sheet 51 of 53	

1757 Power on Block Diagram

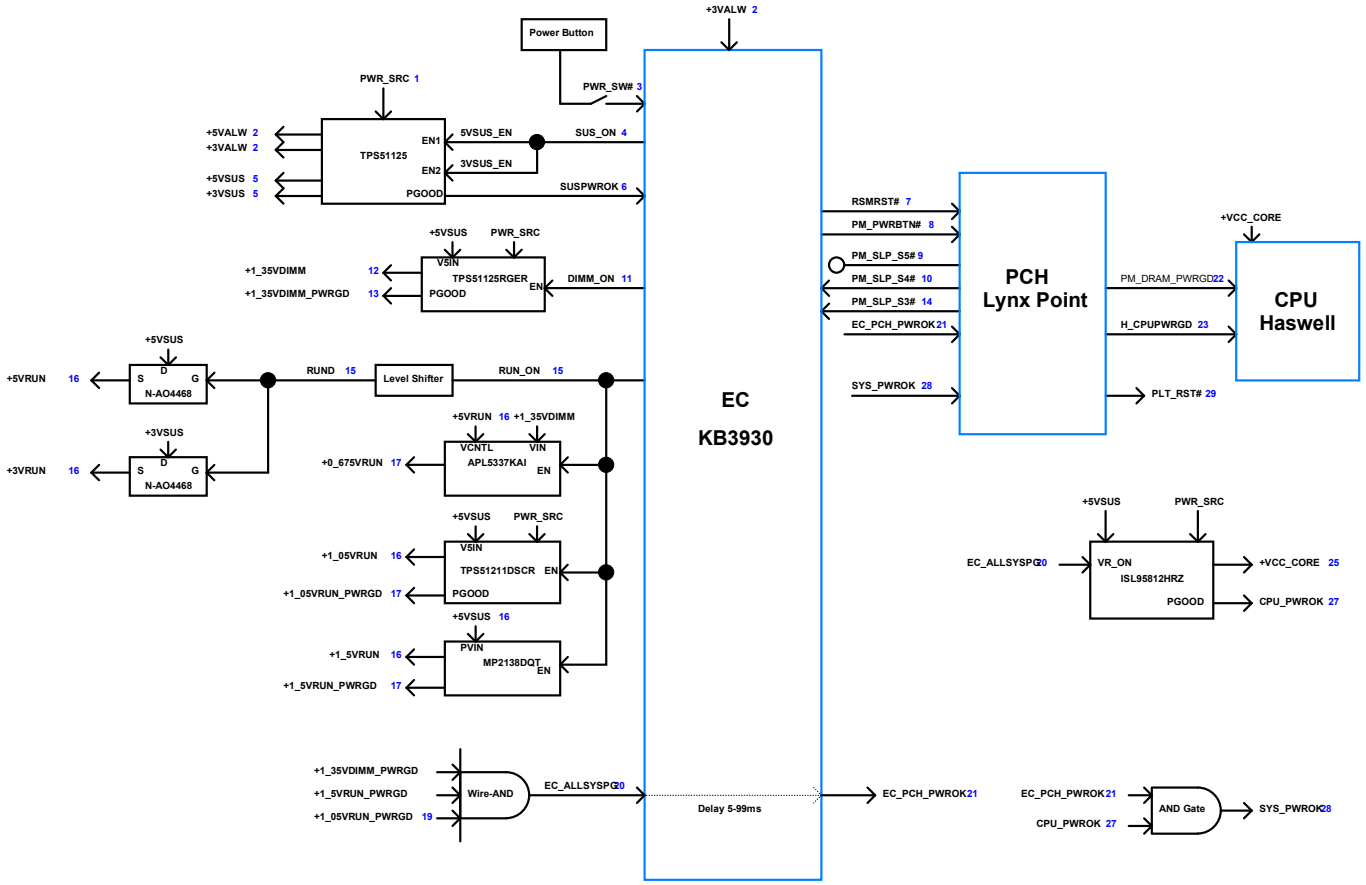

Title	Power on Block Diagram		
Size	Document Number		Rev
Custom	MS_16GF		11
Date:	Friday, January 03, 2014	Sheet 52 of 53	

www.repair1.ru

Power on Sequence

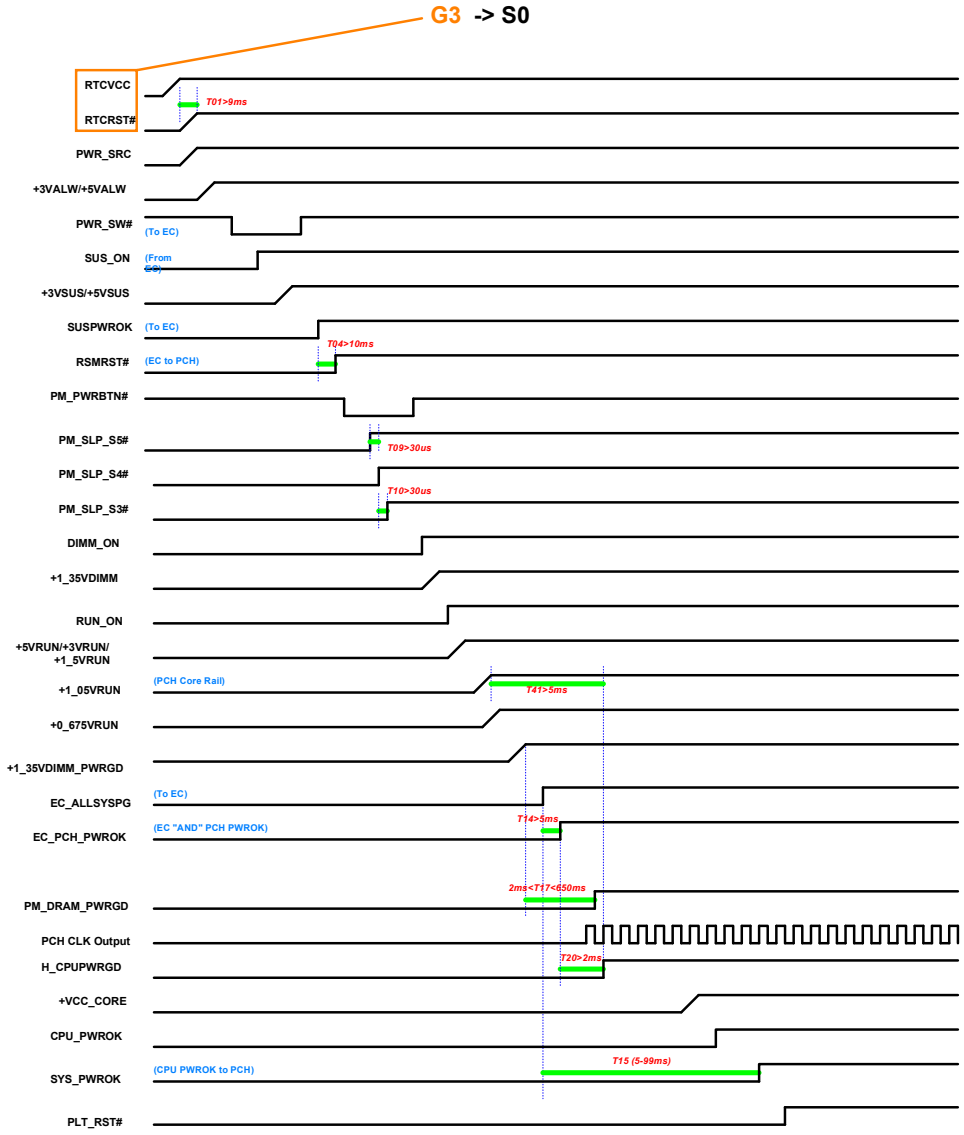

www.repair1.ru

Title	Power on Sequence		
Size: Custom	Document Number: MS_16GF		Rev: 11
Date: Friday, January 03, 2014	Sheet 53 of 53		